R8 series AC servo drive
Instruction manual

Shenzhen Samkoon Technology Co., Ltd.

V1.3.5

Preface

Readers

This user manual is about Samkoon R8 series AC servo drive. It introduces the installation, operation, and debugging process of the R8 driver from safety precautions, product information, installation and wiring, display and keyboard operation, operation, parameter settings, fault alarms, and other aspects.

This document is mainly applicable to the following personnel:：

- Technical support engineer；
- Equipment installation engineer；
- Equipment maintenance engineer.

Sign Definition

In this document, the following signs may appear and represent the following meanings：

sign	description
	Danger signs, misoperation may result in serious consequences such as endangering personal safety, equipment safety, or environmental safety
	Warning signs: Misoperation may lead to major accidents, such as equipment damage or personal injury.
	Pay attention signs. Misoperation may bring certain adverse consequences or prevent successful operation. Generally speaking, solving the problems that arise is not too troublesome.
	Prompt signs, providing instructions and prompts to users
	Examples signs, explain the tasks involved in the operation, enhancing the user's understanding of the tasks.
	Skill signs, provide users with some easily overlooked small features or techniques that can bring convenience.

Contents

Contents 1

1 Safety precautions 1
1.1 General safety precautions 1
1.2 Electrical Safety 3
1.3 Air Environment Safety 4
1.4 Mechanical safety 5
1.5 Other 6

2 Products information 8
2.1 Driver products information 8
2.1.1 Driver mode description 8
2.1.2 Structure of servo driver 9
2.2 Adaptation of servo drive and motor 10
2.3 Drive dimensions 11
2.4 motor products information 12
2.4.1 Motor mode and description 12

3 Installation and wiring 14
3.1 Installation and Dimensions 14
3.1.1 Installation Environment 14
3.1.2 Installation direction and installation space 15
3.1.3 External dimensions of servo motor 16
3.1.4 Technical specifications of servo motor 19
Definition of Wiring and Terminals 20
3.1.5 0.4KW~1.5KW servo wiring 20
3.1.6 2.6~3KW servo driver wiring 23
3.1.7 Definition of Command Terminal CN1 27
3.1.8 Confirmation of Input Signal Status 36
3.2 Selection Instructions for Braking Resistors 37
3.2.1 Braking Resistance Operating Conditions 37
3.2.2 Calculation of Braking Resistance 38

4 panel display and button operation 44
4.1 Panel Composition 44
4.2 Menu Structure 45
4.3 servo panel common displays 46
4.4 Monitoring Display 47
4.5 Auxiliary Function Parameters (Fun Group Parameters) 47

4.5.1 F-000 servo restart 48
4.5.2 F-001 Alarm clear 49
4.5.3 F-002 JOG enable....51
4.5.4 F-003 Inertia identification 52
4.5.5 F-004 Absolute encoder function 54
4.6 user password 54

5 Operation and Debugging.... 56
5.1 Instructions for Using Position Mode.... 56
5.1.1 position mode wiring....57
5.1.2 Function code settings related to position control mode 58
5.2 speed mode description 65
5.2.1 Speed mode wiring： 67
5.2.2 speed mode related function codes 68
5.3 Instructions for using torque mode.... 75
5.3.1 torque mode wiring 76
5.3.2Setting of torque mode related function codes 77
5.4 Hybrid Control Mode 86
5.5 Absolute Value System Usage Instructions.... 89
5.5.1 Overview....89
5.5.2 Relevant function code settings 89
5.6 Trial operation 94
5.6.1 Inspection and Precautions Before Trial Operation....94
5.7 Adjustment 95
5.7.1 Safety precautions during adjustment 95
5.7.2 Basic Process of Adjustment 96
5.7.3 single parameter adjustment 97
5.7.4 Manual Adjustment Function....98
5.7.5 Feed forward gain 100
5.7.6 Mechanical vibration suppression.... 101
5.8 Virtual VDI/VDO 103
5.8.1 Virtual digital signal input terminal（VDI） 103
5.8.2 Virtual Digital Signal Output Terminal (VDO) 104
5.9 Instructions for using multi-stage position mode 106
5.10 Instructions for using multi-stage speed mode.... 108
5.11 Driver matching instructions for the other brand motors 111
5.11.1 Parameter settings before combination use.... 111
5.11.2 Motor encoder phase reset operation.... 114
5.12 Brake setting 115
5.12.1 Brake wiring.... 115
5.12.2 Brake software settings.... 116
5.12.3 brake problem.... 117
5.12.4 Troubleshooting of Brake Issues 120
5.13 Origin reset function.... 120
5.13.1 Origin Return to Zero (Motion Return to Zero).... 122
5.13.2 Using the current position as the origin.... 126

5.13.3 Origin and Zero Point 127
5.13.4 Examples of Use 127

6 Fault Handling 130
6.1 Troubleshooting before operation 130
6.2 Troubleshooting during runtime 131
6.2.1 Troubleshooting of Operational Malfunctions 131
6.2.2 Inaccurate positioning investigation 134
6.3 Software Alarm Handling 136
6.3.1 Alarm category and display 136
6.3.2 Alarm Records 140

7 Modbus communication 160
7.1 Hardware wiring and parameter configuration 160
7.2 Modbus protocol 160

8 User Parameters 169
8.1 P00 Servo basic parameter group 170
8.2 P01 IO input parameter group 174
8.3 P02 IO output parameter group 181
8.4 P03 gain adjustment parameter group 185
8.5 P05 Position Control Parameter Group 188
8.6 P06 Speed Control Parameter Group 194
8.7 P07 Torque Control Parameter Group 196
8.8 P08 Analog Parameter Group 198
8.9 P09 Communication Control Parameter Group 199
8.10 P0A Stop Control Parameter Group 202
8.11 P0B Fault and Protection Parameter Group 204
8.13 P0D multi segment speed control parameters 207
8.14 P0E adaptive adjustment parameter group 210
8.15 P10 motor parameter group 214
8.16 P11 Driver Parameter Group 217
8.17 P12 Auxiliary Function Parameter Group 221
8.18 P13 Monitoring Parameter Group 223
8.19 P15 Virtual IO Parameter Group 227
7.3 P16 version information parameter group 235

Appendix 2: Troubleshooting of Common Servo Problems 236
7.4 The servo motor has high noise 236

7.5 The command position is opposite symbol to the feedback position 236
7.6 Abnormal number of servo receiving command pulses 237
7.7 Troubleshooting of servo alarm AL.082 238
7.8 Servo fault conditions and countermeasures 239

1 Safety precautions

1.1 General safety precautions

When installing, operating, and maintaining all series of AC servo drives in our company, the safety precautions introduced in this section should be followed.

All safety precautions

To ensure personal and equipment safety, please follow all safety precautions indicated on the equipment and in the manual when installing, operating, and maintaining the equipment. The "Caution", "Warning", and "Danger" items in the manual do not represent all safety precautions that should be followed, but only serve as supplements to all safety precautions.

Local regulations and norms

When operating equipment, local regulations and norms should be followed. The safety precautions in the manual are only a supplement to local safety regulations.

Basic installation requirements

The personnel responsible for installing and maintaining our company's products must first undergo strict training, understand various safety precautions, and master the correct operating methods before installing, operating, and maintaining the equipment:

- Only qualified or trained personnel are allowed to install, operate, and maintain equipment；
- Only qualified professionals are allowed to dismantle safety facilities and maintenance equipment；

- The replacement and modification of equipment or components (including software) must be completed by personnel certified or authorized by our company；
- Operators should promptly report any malfunctions or errors that may cause safety issues to the person in charge.

Grounding requirements

The following requirements are only applicable to equipment that requires grounding：

- When installing equipment, it is necessary to first ground it before dismantling the equipment, remove the ground wire at the end；
- Prohibit damaging the grounding conductor；
- Prohibit operating equipment without installing grounding conductors；
- The equipment should be permanently connected to ground. Before operating the equipment, the electrical connections of the equipment should be checked to ensure reliable grounding.

Equipment safety

- Before operation, the equipment should be reliably fixed on an electrical cabinet or other stable object, such as a desktop or floor;
- When the system is running, do not block the ventilation openings；
- When installing equipment, if screws need to be tightened, tools must be used for operation；

- After installing the equipment, please remove any empty packaging materials from the equipment area

1.2 Electrical Safety

Introduce safety precautions for high voltage, thunderstorms, high leakage current, power lines, and fuses.

high voltage

危

★ The high-voltage power supply provides power for the operation of equipment. Direct contact or indirect contact with the high-voltage power supply through damp objects can pose a fatal danger.

★ Irregular and incorrect high-voltage operation can cause accidents such as fires or electric shocks.

Thunderstorm weather

This requirement only applies to equipment installed outdoors.

危

★ Prohibit outdoor high-voltage and AC power operations in thunderstorm weather, otherwise there may be life-threatening situations。

High leakage current

★ Before connecting the power supply, the equipment must be grounded first, otherwise it will endanger personal and equipment safety.

power lines

危

- ★ Irregular and incorrect operation of high-voltage power sources can cause accidents such as fires or electric shocks.
- ★ Before installing or removing the power lines, the power switch must be turned off.
- ★ The power supply voltage must be compatible with the driver voltage, otherwise it will endanger personal and equipment safety.
- ★ Before connecting the power cord, it is necessary to confirm that the power lines label is correct before connecting.
- ★ After connecting the power, please do not touch the wiring terminals.
- ★ A suitable air switch must be connected in series between the power lines and the driver to protect personal and equipment safety.
- ★ After disconnecting the power, wait for 5 minutes until the main circuit is fully discharged before proceeding with maintenance operations or re powering on. Otherwise, electric shock may occur.

Fuse

危

- ★ fuses must be replaced by personnel who is certified or authorized by our company;
- ★ When the fuse on the device blows, it should be replaced with a fuse of the same model and specification.

1.3 Air Environment Safety

Introduce safety precautions for the operating environment of the equipment.

危

★ Do not place the equipment in a flammable, explosive gas or smoke environment, and do not perform any operations in that environment.

★ Do not place the equipment in an environment with corrosive gases, and do not perform any operations in that environment.

1.4 Mechanical safety

Introduce safety precautions for motors, drilling, fans, and handling heavy objects.

Motor

危

★ Poor insulation of electric motors can damage equipment and even endanger life safety.

Please use insulated motors of Class B or above, otherwise there is a risk of electric shock.

Drill hole

!

★ Drilling holes that do not meet the requirements can damage the driver cable, and the metal chips generated by drilling entering the servo driver can cause a short circuit on the circuit board.

Before drilling holes on the cabinet, the cables inside the cabinet should be removed first.

Strictly prevent metal chips from falling into the interior of the AC servo drive. After drilling, the metal chips should be cleaned in time.

Fan

!

★ Improper operation of the cooling fan at high speed can cause

equipment damage.

When replacing components, pay attention to placing components, screws, tools, and other objects properly to avoid falling into the running fan and damaging the fan or equipment.

carry

★ When handling heavy objects, preparations should be made for load-bearing to avoid being crushed or twisted by heavy objects.

- Please wear protective gloves when handling the drive to avoid scratching your hands.
- When handling heavy drives, please keep your back straight and move smoothly to avoid sprains.
- When removing the drive from the electrical cabinet, the bottom edge of the drive should be supported instead of the panel or power terminal.

1.5 Other

Introduce the safety precautions for binding cables and operating cables at low temperatures.

Binding cables

★ Signal lines should be tied separately from high current or high voltage lines.

Laying cables

When the temperature is too low, severe impact or vibration may cause brittle cracking of the plastic outer skin of the cable. To ensure safety, the following requirements should be followed:

- All cables should be laid above 0℃
- If the storage environment temperature of the cable is below 0℃, the cable must be stored in an environment temperature above 0℃ for more than 24 hours before laying operations.
- When handling cables, especially in low temperature environments, they should be handled with care.

2 Products information

2.1 Driver products information

2.1.1 Driver mode description

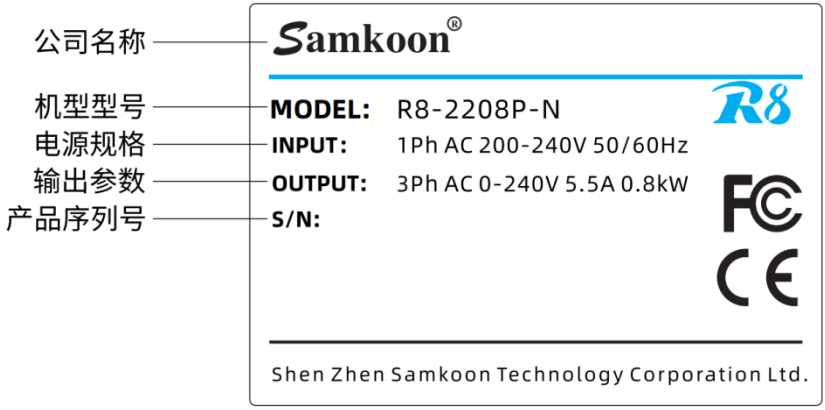

Figure 2-1 driver name plate

Figure 2-2 servo driver name

2.1.2 Structure of servo driver

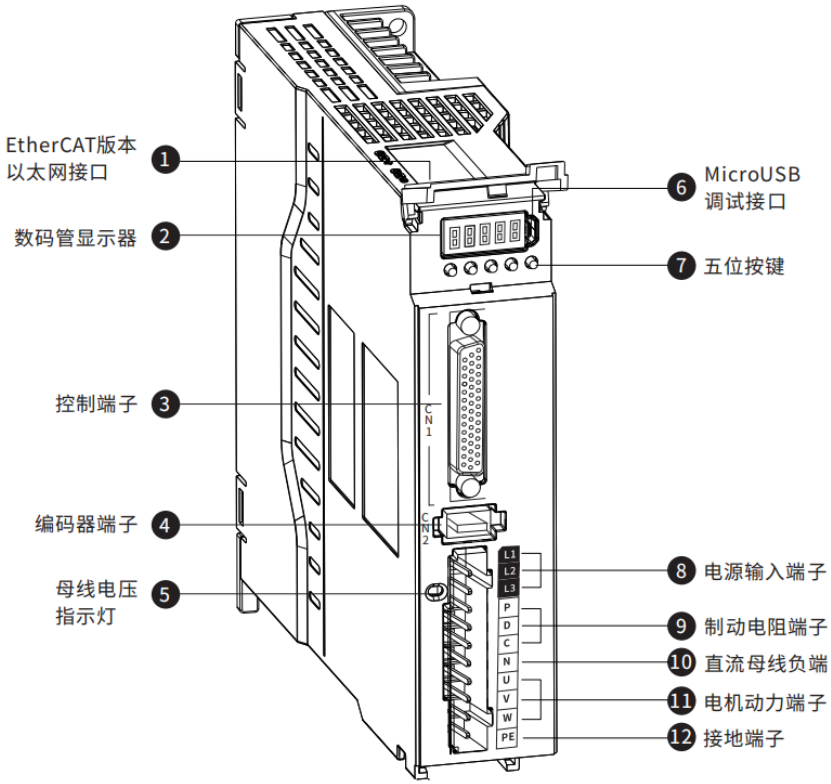

Firgure 2-3 R8 series servo

2.2 Adaptation of servo drive and motor

The adaptation of R8 series AC servo drive and motor is shown in the table below.

Table 2-1 R8 series Servo and motor

motor / driver	R8-2204P(Z)-N	R8-2208P(Z)-N	R8-2210P(Z)-N	R8-2215P(Z)-N	R8-2226P(Z)-N	R8-3830P(Z)-N
60HK-A01330	●	⊙	⊙	⊙	⊙	⊙
80HK-A02430	○	●	⊙	⊙	⊙	⊙
80HK-A03230	○	⊙	⊙	⊙	⊙	⊙
130HK-A04820	○	○	●	●	⊙	⊙
130HK-A07220	○	○	○	⊙	⊙	⊙
130HK-A09620	○	○	○	⊙	●	●
180HK-A19015	○	○	○	○	⊙	⊙

1.in table“○”cannot be matched，“●”standard matched，“⊙”can be matched；

2.Currently, the driver models have not yet been able to match all motors, and the motor models are not comprehensive (below 400W). We will be updated along with product development in the future；

3.The above table shows the matching of motors and drivers based on their rated output power relationship. The detailed models and wires need to be selected according to the specific needs of the user (such as encoder type,with brake or not, etc.)

★ Without the permission or authorization of our company, it is

prohibited to adapt motors other than those listed in the above table. Otherwise, it may cause motor damage and even endanger personal safety.

2.3 Drive dimensions

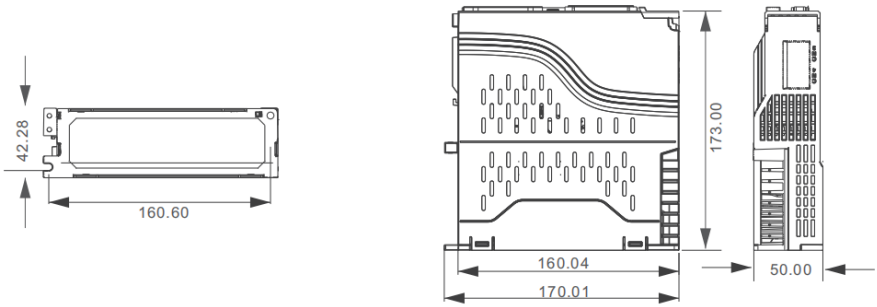

Figure 2-4 R8-2204/R8-2208 dimension

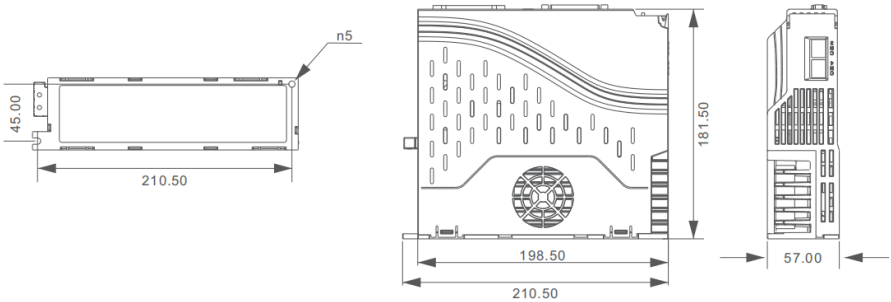

Figure 2-5 R8-2210/R8-2215 dimension

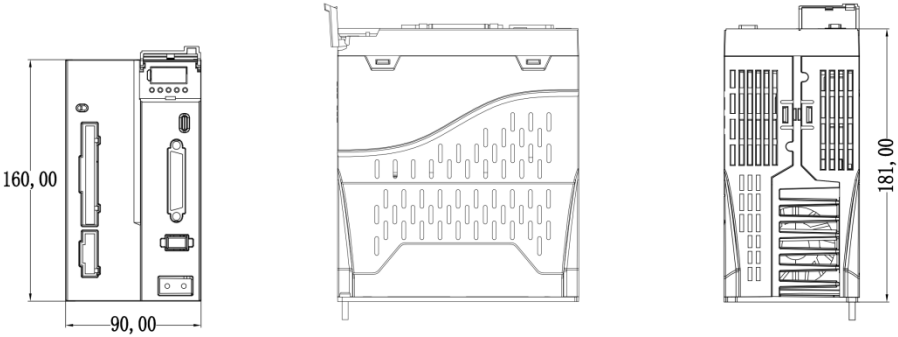

Figure 2-6 R8-2226/R8-3830 dimension

2.4 motor products information

2.4.1 Motor mode and description

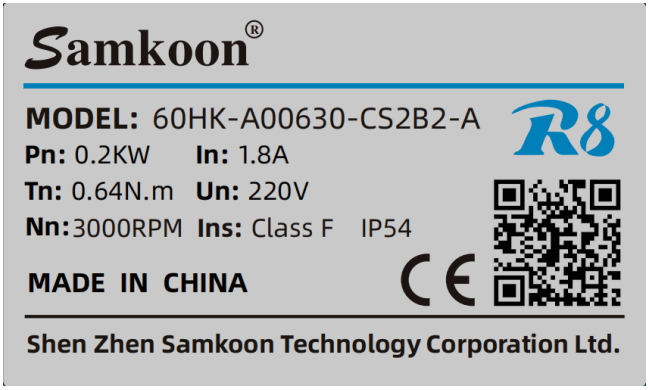

Figure 2-6 motor name plate

80	HK	-	A	024	30	-	C	S	2	A	2
①	②		③	④	⑤		⑥	⑦	⑧	⑨	⑩

① 法兰尺寸
40：40mm×40mm
60：60mm×60mm
80：80mm×80mm
130：130mm×130mm
180：180mm×180mm

② 产品系列
HK：HK系列电机

③ 编码器类型
A：绝对式17位编码器
B：绝对式23位编码器

④ 额定转矩
006：0.6 N·m
013：1.3 N·m
024：2.4 N·m
190：19 N·m

⑤ 额定转速
15：1500 rpm
20：2000 rpm
30：3000 rpm

⑥ 编码器类别
C：磁编
L：光编

⑦ 编码器类别
S：单圈
M：多圈

⑧ 输入电压
2：AC 220 V
3：AC 380 V
4：AC 48 V

⑨ 轴端结构
A：有螺纹孔，有键
B：有螺纹孔，无键
C：无螺纹孔，有键
D：无螺纹孔，无键

⑩ 选购件
1：不含选购件
2：带油封
3：带油封和电磁制动器

Figure 2-7 motor mode name method

3 Installation and wiring

3.1 Installation and Dimensions

When installing, operating, and maintaining R8 series of drives, the safety precautions introduced in this section should be followed. If it needs to be used outside the specified environmental conditions, please consult our company in advance.

3.1.1 Installation Environment

- Working temperature: 0-40 ℃ (no freezing)；
- Working humidity: relative humidity below 80% (no condensation)；
- Storage temperature: -20~60 ℃；
- Storage humidity: relative humidity below 80% (no condensation)；
- Vibration：4.9 m/s^2 below；
- Atmospheric pressure：86kPa~106kPa；
- Please do not use it in places directly exposed to sunlight；
- Installed in a well ventilated, less humid and dusty area；
- Installed in environments without corrosive or ignition gases, oil and gas, cutting fluids, cutting powders, iron chips, etc。

【Precautions】

★ When used in a vibrating environment, in order to prevent vibration from being transmitted to the servo drive, please install shock absorbers on the surface of the servo drive；

★ When transporting, installing, or disassembling the motor, do not apply excessive impact force, especially on the encoder part. Do not directly lift the motor power line or encoder line during

transportation;

★ When installing wiring terminals, please tighten the fixing screws at both ends of the terminals to avoid loosening due to external interference;

★ When used in environments with corrosive gases, please try to prevent the invasion of corrosive gases. Although corrosive gases cannot cause timely damage to servo drives, they can lead to aging of electronic components or circuit boards, affecting their lifespan

3.1.2 Installation direction and installation space

Reserve sufficient space in the electrical cabinet to ensure that hot air flows from bottom to top for effective heat dissipation of the servo drive. Please make sure to comply with the installation space requirements shown in the following diagram.

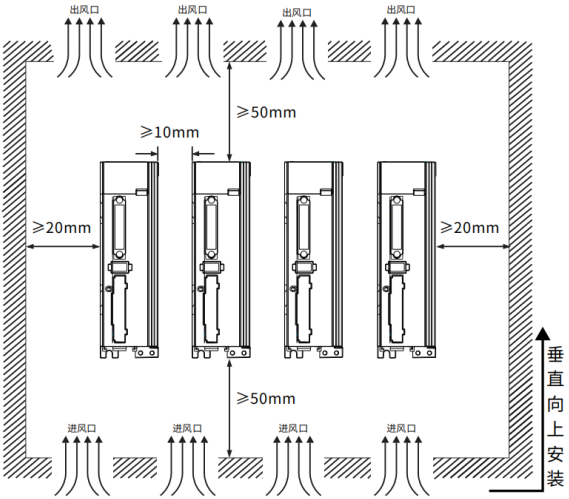

Figuae 3-1 R8 series driver fixing space

【Installation Instructions】

★ The installation direction should be perpendicular to the wall.

★ Use natural convection or a fan to cool the servo drive.

If running for a long time, it is recommended to use servo below 40°C. If the ambient temperature exceeds 40°C, please place it in a well ventilated area.。

If this product is installed in an electrical cabinet, it is necessary to ensure that the size and ventilation conditions of the cabinet are such that all electronic devices used inside do not pose a risk of overheating.

【Notes】

★ The lifespan of the driver depends on the temperature around its internal electrolytic capacitor. When electrolytic capacitors approach their service life, they may experience a decrease in electrostatic capacity and an increase in internal resistance, which can affect the normal operation of the driver, such as false alarms caused by input voltage. Therefore, the ventilation conditions of the installation environment play a decisive role in the service life of the driver.

★ After a power off, please do not attempt to immediately disassemble the drive or motor to prevent the risk of electric shock or burns. It is necessary to wait for the stored power in the drive to be released or for the external iron shell of the drive to cool down before performing relevant operations.

3.1.3 External dimensions of servo motor

The motor characteristics and installation dimensions are shown in Table 3.1

Table 3-1 motor length L1

Motor mode	Encoder type	Motor length（mm） No brake	Motor length（mm） With brake
60HK-A01330	Magnetic（C）	98	136
	light（L）	108	146

80HK-A02430	Magnetic（C）	107	147
	light（L）	120	160
80HK-A03230	Magnetic（C）	121	161
	light（L）	134	174
130HK-A04820	Magnetic（C）	132	179
	light（L）	132	179
130HK-A07220	Magnetic（C）	147	179
	light（L）	147	179
130HK-A09620	Magnetic（C）	162	209
	light（L）	162	209
180HK-A19015	Magnetic（C）	--	--
	light（L）	183	276

note：table“--”no such motor type

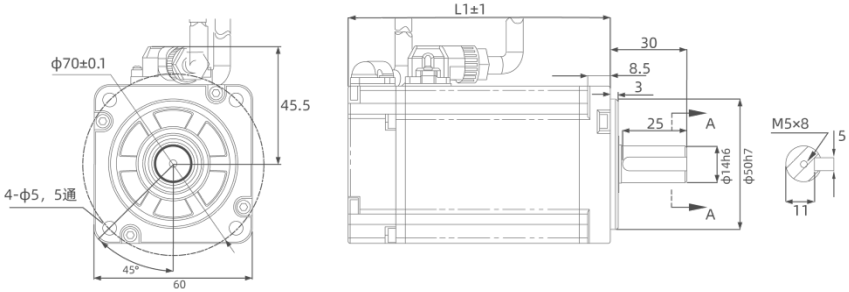

Figure 3-2 60HK motor size

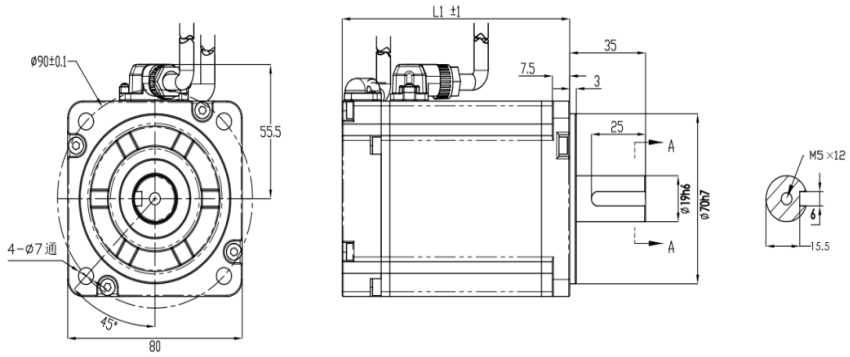

Figure 3-3 80HK motor size

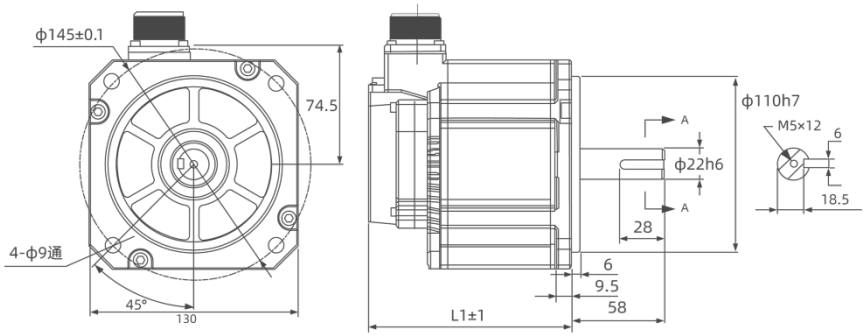

Firue 3-4 130HK motor size

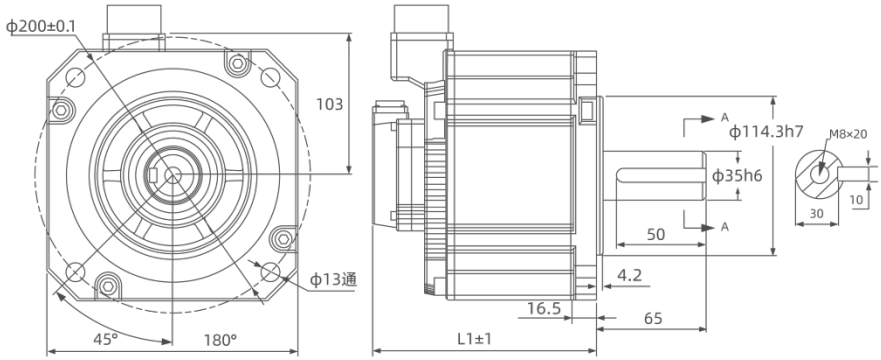

Figure 3-5 180HK motor size

3.1.4 Technical specifications of servo motor

Table 3-2 Parameters and Specifications of Servo Motors

电机型号	额定功率（w）	额定电压（V）	额定电流（A）	额定转矩（N·m）	最大转矩（N·m）	额定转速（rpm）	最大转速（rpm）
60HK-A00630	200	220	1.80	0.64	1.91	3000	5500
60HK-A01330	400	220	2.80	1.27	3.82	3000	5500
80HK-A02430	750	220	4.80	2.40	7.20	3000	5500
80HK-A03230	1000	220	4.80	3.20	6.40	3000	4500
130HK-A04820	1000	220	6.50	4.77	14.3	2000	3000
130HK-A07220	1500	220	8.90	7.17	21.5	2000	3000
130HK-A09620	2000	220	12.2	9.55	28.6	2000	3000
180HK-A19015	3000	380	7.50	19.0	47.0	1500	1700

Definition of Wiring and Terminals

3.1.5 0.4KW~1.5KW servo wiring

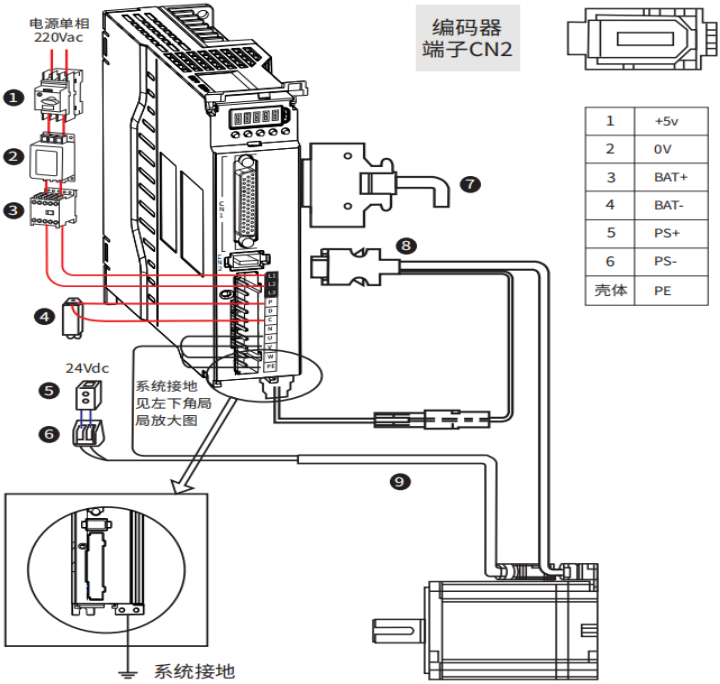

1	+5v
2	0V
3	BAT+
4	BAT-
5	PS+
6	PS-
壳体	PE

number	name	description
1	Wiring circuit breaker	Cut off the circuit when the power cable overcurrent
2	Noise filter	Install a current filter to prevent noise from outside the power cable
3	Electromagnetic contactor	Turn on/off the servo power supply. Please install a surge suppressor during use
4	Braking resistor	When capacitance is insufficient itself, the P-C terminal should connected to an external braking resistor
5	Brake power supply	24Vdc voltage source, used when servo motor with brake
6	Electromagnetic contactor	Brake control signal, turn on/off the brake power supply, please install surge suppressors when using. It is recommended to use servo DO controlled electromagnetic contactors
7	Control cable	Non standard, provide terminals, cables could be self-made or purchased separately
8	Encoder cable	Motor wiring, please select the appropriate length of cable according to actual needs
9	Motor power cable	

Figure 3-6 R8 series servo 0.4~1.5KW wiring diagram

Terminal	Name	description
L1	Power supply input	If power is single-phase AC 220V , connect L1 and L2 L3 vacant, do not connect
L2		
L3		
P	Braking resistor terminal	When using internal braking resistors, short-circuit P and D; When using an external braking resistor, disconnect P and D and connect the external braking resistor between P and C
D		
C		
N		

U	Motor connection cable	connected to the corresponding terminals of the motor U, V, W, and PE;
V		
W		
PE		

3.1.6 2.6~3KW servo driver wiring

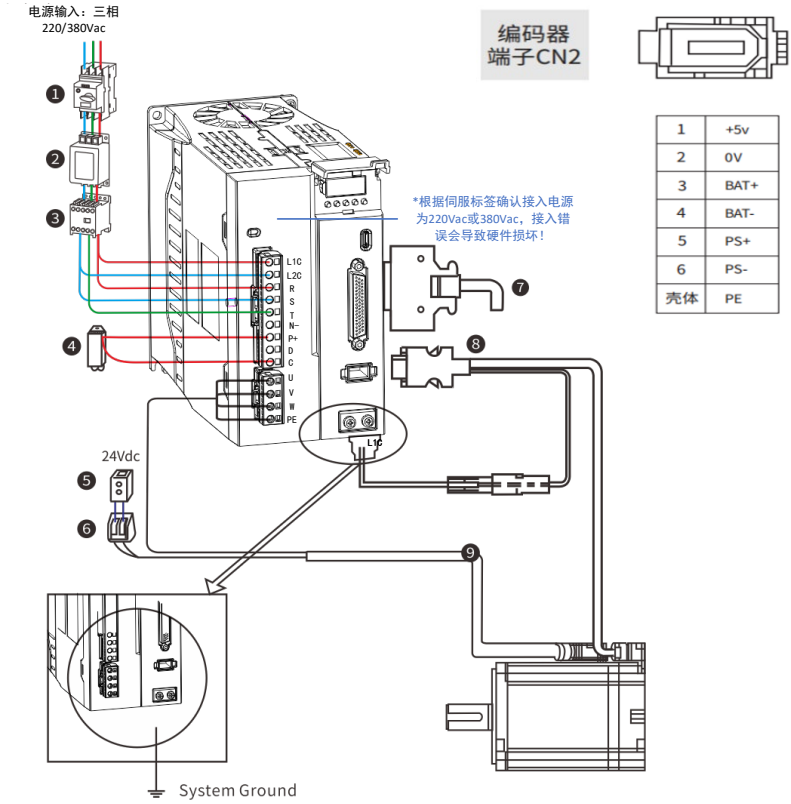

1	+5v
2	0V
3	BAT+
4	BAT-
5	PS+
6	PS-
壳体	PE

number	name	description
1	Wiring circuit breaker	Cut off the circuit when the power cable overcurrent
2	Noise filter	Install a current filter to prevent noise from outside the power cable
3	Electromagnetic contactor	Turn on/off the servo power supply. Please install a surge suppressor during use
4	Braking resistor	When capacitance is insufficient itself, the P-C terminal should connected to an external braking resistor
5	Brake power supply	24Vdc voltage source, used when servo motor with brake
6	Electromagnetic contactor	Brake control signal, turn on/off the brake power supply, please install surge suppressors when using. It is recommended to use servo DO controlled electromagnetic contactors
7	Control cable	Non standard, provide terminals, cables could be self-made or purchased separately
8	Encoder cable	Motor wiring, please select the appropriate length of cable according to actual needs
9	Motor power cable	

Figure 3-7 R8series servo 2.6~3KW wiring diagram

Terminal	Name	Description
L1C	Control power input	If 380VAC connect 2 live lines
L2C		If 220VAC connect one live ,one neutral
L1	Power supply input	3-phase 220VAC or 3-phase 380VAC Power, connect 3 live lines (R, S ,T)
L2		
L3		
P	Braking resistor terminal	When using internal braking resistors, short-circuit P and D;
D		
C		When using an external braking resistor,

N		disconnect P and D and connect the external braking resistor between P and C
U	Motor connection cable	connected to the corresponding terminals of the motor U, V, W, and PE;
V		
W		
PE		

【Notes】

★ To protect the power line, please choose an air circuit breaker that matches the power capacity as the current protection device.

★ Electromagnetic contactors are used in conjunction with coil surge absorbers , connect or disconnect the main power supply of the driver through a controller.

★ It is strictly prohibited to use electromagnetic contactors for motor operation or shutdown, otherwise it may cause damage to the drive.

★ In order to prevent interference from the motor to the driver, the power and ground wires of the motor must be connected to the terminals of the driver's shell.

【Wiring Instructions】

★ Recommend using our company's servo drive cable

★ Use voltage resistant cables with a voltage rating of AC600V or higher and a temperature rating of 75 °C or higher

★ Please ensure that the bending radius of the cable is at least 10 times the outer diameter

★ When used in high ambient temperatures, please choose heat-resistant cables as ordinary cables are prone to aging and brittle。

★ The cable based on polyvinyl chloride resin is prone to hardening and cracking at low temperatures, and should be distinguished when used in environments below 0 °C.

The relationship between wire specifications and allowable current is illustrated in the following example, please refer to it when selecting cables.

Example: Select the cable under the conditions of three-phase AC 220V, current 35A, and ambient temperature of 30 ℃ :

Step 1: Choose a cable with a diameter of 3.5-5.5mm^2

Step 2: Calculate the applicable allowable current

Applicable allowable current

=basic allowable current x current reduction factor x current correction factor

= 37×0.7×1.414

≈ 36.6 (A) ＞ 36 (A) Qualified

choose a 3-core copper stranded cable with a cross-sectional area of 3.5 mm^2

Step 3: If the selected cable is unqualified, increase the proposed wire diameter and repeat the above steps until it is qualified.

Basic allowable current of copper twisted cable

Nominal cross-sectional area of wire （mm^2）	Basic allowable current （A）
2～3.5	27
3.5～5.5	37
5.5～8	49
8～14	61
14～22	88
22～30	115
30～38	139

Current reduction coefficient

The reduction factor varies for different cables. When the wire used is in a synthetic resin wire shuttle, synthetic resin tube, metal wire shuttle, metal tube, or wire hose, the current reduction factor is shown in the following table.

number of lines within the same pipe	Current reduction factor
1～3	0.7
4	0.63
5～6	0.56
7～15	0.49
16～40	0.43
41～60	0.39
> 60	0.34

The basic allowable current and current reduction factor recorded in this example may change due to specification modifications, so please confirm with the cable manufacturer before selecting the cable.

3.1.7 Definition of Command Terminal CN1

1）Definition of Control Signal Port

The R8 instruction terminal CN1 includes pulse and direction input pins, switch input pins, switch output pins, and encoder feedback output pins. In pulse sequence instruction mode, the diagram of each pin on terminal CN1 plug is as follows：

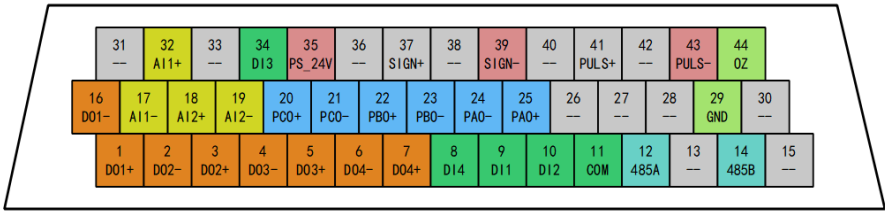

Figure 3-8 control cable CN1 definition

【Terminal Description】

★ The command terminal is a DB44 pin plug. Please determine the pin sequence according to the soldering surface in the diagram.

Table 3-3 Definition of Command Terminal CN1 Signal

function	Terminal mark	Name	Description
Pulse input	35	PS_24V	Connect PLC power supply 24V
	43	PULS-	Single ended pulse input signal/differential pulse input negative
	41	PULS+	Differential pulse input positive
	39	SIGN-	Single ended directional input signal/differential pulse input negative
	37	SIGN+	Differential pulse input positive
Pulse output	9	DIN1	Input 1 (default function: servo enable)
	10	DIN2	Input 2 (default function: alarm clearing)
	34	DIN3	Input 3 (default function: forward drive disabled)

	8	DIN4	Input 4 (default function: negative drive disabled)
	11	COM	Input common terminal
	1	DO1+	Output 1 (default function: servo ready) Output 2 (default function: positioning completed)
	16	DO1-	
	3	DO2+	Output 3 (default function: brake output) Output 4 (default function: fault output)
	2	DO2-	
	5	DO3+	Connect PLC power supply 24V Single ended pulse input signal/differential pulse input negative
	4	DO3-	
	7	DO4+	Differential pulse input positive
	6	DO4-	
Analog	32	AIN1+	Analog input channel 1, -10V~+10V (Can be used as speed and torque commands)
	17	AIN1-	
	18	AIN2+	Analog input channel 2, -10V~+10V (Can be used as speed and torque commands)
	19	AIN2-	
Frequency division output	25	PAO+	Divided differential output (5V level) (The signal source can be selected as an encoder or instruction pulse)
	24	PAO-	
	22	PBO+	
	23	PBO-	
	20	PCO+	

	21	PCO-	
	44	OZ	Single ended Z-pulse output
	29	GND	Driver digital ground
RS485	12	485/A	Supports Modbus communication
	14	485/B	

2）Single ended input command pulse port

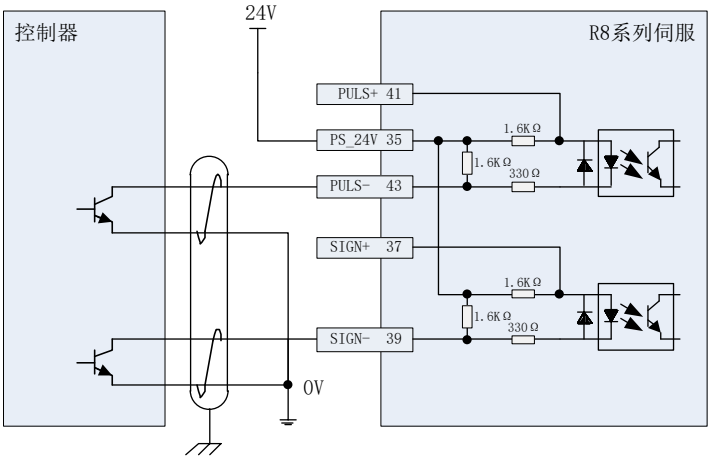

Figure 3-9 Single ended pulse input wiring (NPN connection)

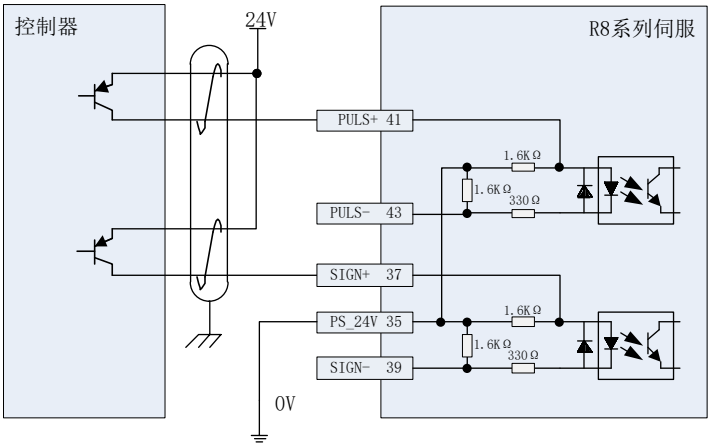

Figure 3-9 Single ended pulse input wiring (NPN connection)

3）Differential input command pulse terminal

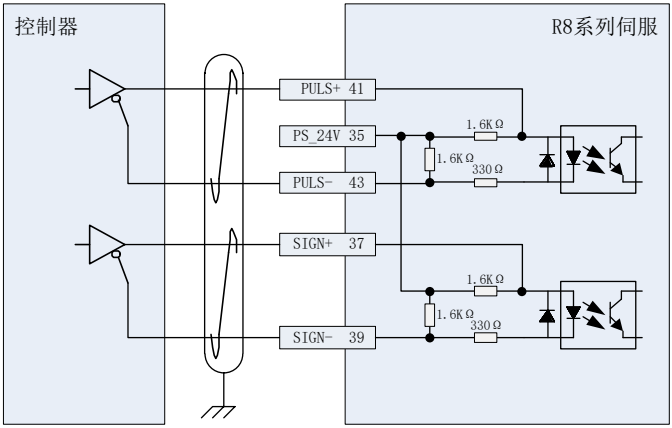

Figure 3-10 Differential pulse input wire method（Differential or 5V）

4）Digital input pin

Taking DI1 as an example, the internal circuit of the digital input terminal：

When the upper controller outputs a relay：

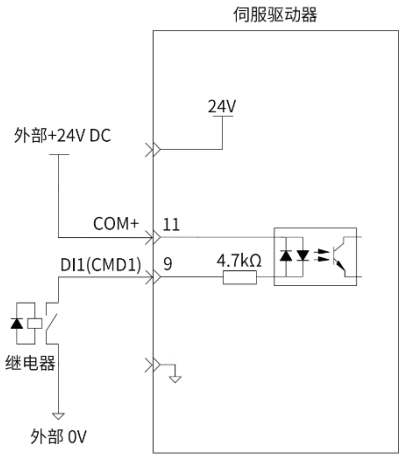

When the upper controller outputs an open collector circuit:

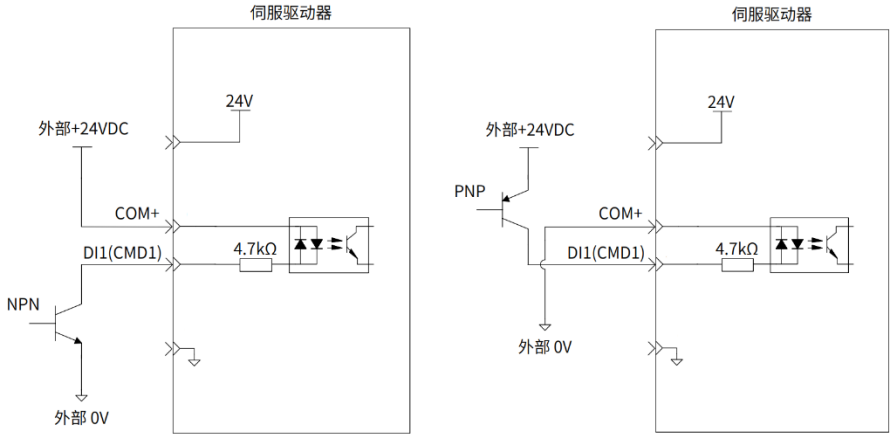

Figure 3-12 Digital input (input IO)

【 Precautions 】

★ The arrows in the figure represent "input" or "output", rather than the actual direction of the current.

★ Not supporting mixed use of PNP and NPN inputs.

★ Do not directly connect the 24V power supply to the DI terminal, otherwise it may cause damage to the internal circuit and abnormal use of the DI terminal.

★ The input circuit of the servo drive uses a bidirectional optocoupler. Please select the common collector circuit or common emitter circuit connection according to the mechanical specifications.

5）Analog input signal

Analog single ended input

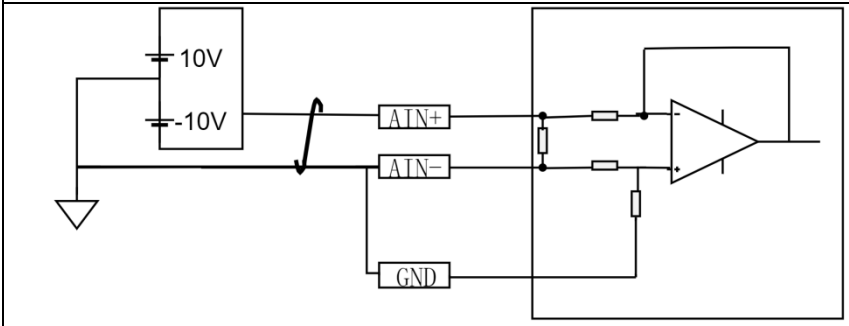

- he upper controller requires 2 wires to connect;；
- AGND and AIN are short circuited inside the CN1 terminal；
- Recommend using shielded wire；

Analog differential input

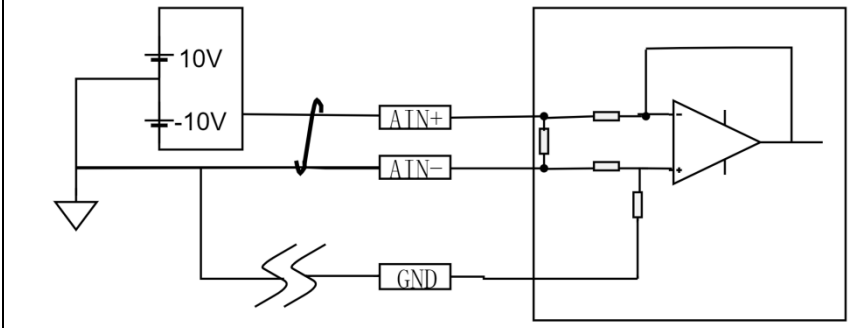

- The upper controller requires 3 wires to connect；
- Connect one ground wire to the CN1 terminal AGND, which has stronger resistance to common mode；
- Recommend using shielded wire；

Figure 3-13 Analog Port Input

【 Precautions 】

★ Speed and analog control share two analog inputs, which can be selected through parameters

★ The input range of analog signal is -10~10V, and the input impedance is about 10K Ω

★ If there are too many wires, short circuit GND to AIN -

6）Drive relay or optocoupler

The digital output by transistors and can drive relays or optocouplers. The reference circuit is as follows：

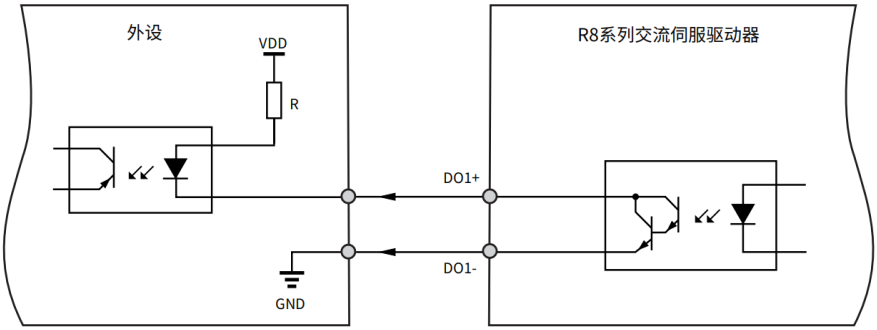

Figure 3-14 digital output (output IO, drive optocoupler)

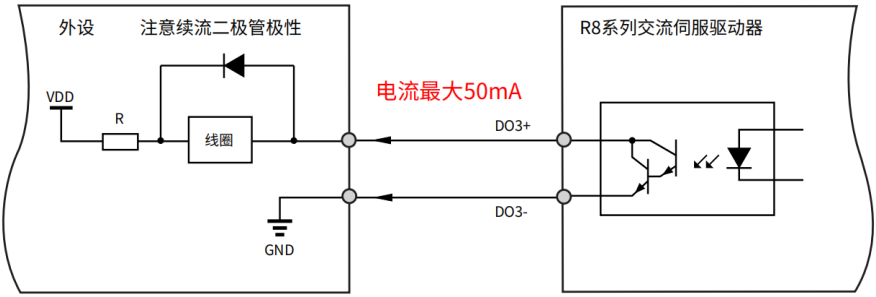

Figure 3-15 digital output (output IO, drive relay）

➢ **【Precautions】**

★ VDD：12～24V，reversing the polarity of the driving power supply can cause the driver to malfunction

★ Select the appropriate resistor R based on the driving current ≤ 50mA

★ The arrows in the figure represent "input" or "output", rather than the actual direction of the current

★ Do not directly connect the 24V power supply to the DO terminal, otherwise it may cause damage to the internal circuit and abnormal use of the DO terminal

7）Encoder signal output pin

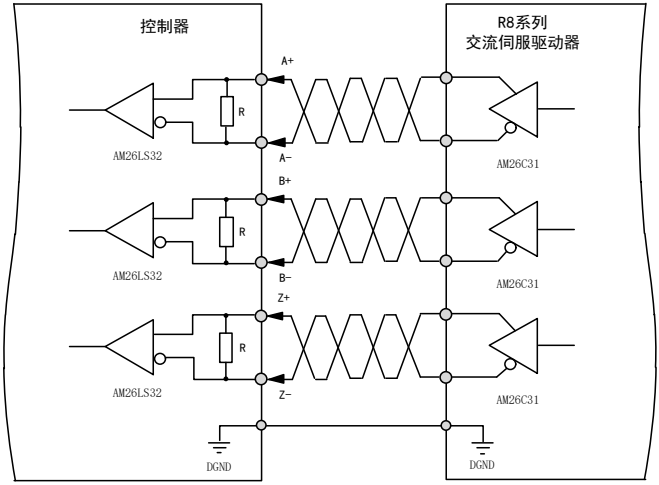

Figure 3-16 Encoder Divided Output

➢ **【Precautions】**

★ The arrows in the figure represent "input" or "output", rather than the actual direction of the current

R8 series servo drives supports encoder zero position signal Z collector open circuit output, used to drive larger loads. The reference circuit is as follows：

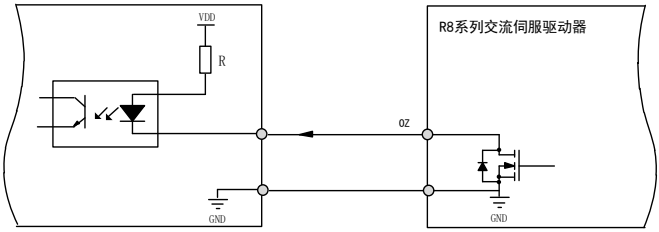

Figure 3-17 Encoder Z Signal Collector Output

➢ **【Precautions】**

★ The pulse width of the Z signal is narrow, and a high-speed optocoupler must be used to receive the signal.

★ The arrows in the figure represent "input" or "output", rather than the actual direction of current flow

3.1.8 Confirmation of Input Signal Status

The steps to confirm the input signal status through the driver panel are as follows:

1. Press the MODE button to switch to the monitoring parameter digital display and find the o-029 parameter, then click the SET button

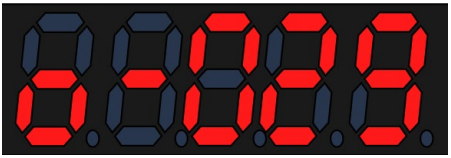

When the optocoupler is not conducting, the input is at a high level, and the upper 4 points (LED) light up. When the optocoupler is conducting, the input is at a low level, and the lower 4 points (LED) light up. For example, all four input IO digital are in a non-conductive state,from right to left is DIN1~DIN4.

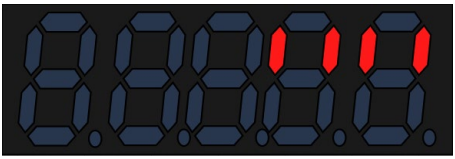

3.1.9 Confirmation of output Signal Status

The steps to confirm the input signal status through the driver panel are as follows：

Press the MODE button to switch to the monitoring parameter digital display and find the o-030 parameter, then click the SET button

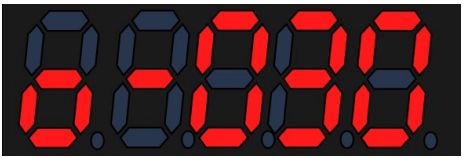

When the optocoupler is not conducting, the input is at a high level, and the upper 4 points (LED) light up. When the optocoupler is conducting, the input is at a low level, and the lower 4 points (LED) light up. For example, all four output IO digital are in a non-conductive state,from right to left is DO1~DO4.

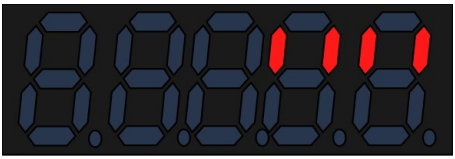

3.2 Selection Instructions for Braking Resistors

3.2.1 Braking Resistance Operating Conditions

When the torque and speed of the motor are in opposite directions, energy is transmitted back to the driver from the motor end, causing the main cable voltage to increase. When it reaches the braking point, the energy can only be consumed through the braking resistor. At this point, the braking energy must be consumed according to the braking requirements, otherwise it will damage the servo drive. The braking resistor can be built-in or external. Special note: Internal and external braking resistors cannot be used at the same time。

In the following situations, the servo motor operates in regenerative mode. When using the servo driver, attention to selecting regenerative braking resistors based on the actual situation。

- With a large inertia load and high acceleration；
- Continuously descending and running on the vertical axis;；
- The servo motor is dragged by the load and runs continuously；

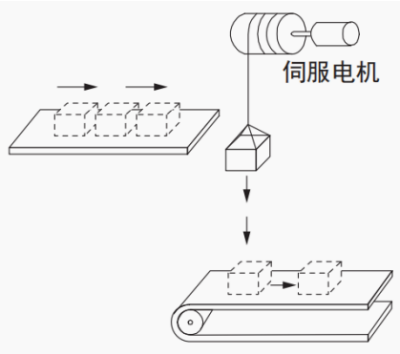

Figure 3-18 servo with brake situation

The specifications of the R8 series servo built-in regenerative resistor are shown in Table 3.5 below

Rated output	400W	750W	1000W	1.5KW	2.6KW	3.0KW
Resistance	无	50Ω	50Ω	40Ω	50Ω	50Ω

value						
Allowable power Pa	无	50W	60W	60W	80W	80W

Table 3.4 R8 servo built-in regenerative resistor resistance and power

➢ **Note：**

*1.The R8 series servo drive with a power of 400W or more is equipped with a built-in regenerative resistor. When the power of the built-in resistor is insufficient, please calculate and add an external regenerative resistor according to the following method。

*2、When the braking function is not required, the braking function can be turned off by setting parameters. Refer to the parameter settings section P00 for parameter settings P00-05/P00-06/P00-07.

3.2.2 Calculation of Braking Resistance

➢ **Ignore load torque in Reciprocating motion state**

The capacity calculation of the regenerative resistor during acceleration and deceleration of the operating cycle shown in the following figure serves as an example to illustrate the calculation steps. Assuming the motor performs a reciprocating motion, the kinetic energy will be converted into electrical energy and fed back to the main cable capacitor during braking. When the main cable voltage exceeds the braking voltage, the braking resistor will consume the excess feedback energy. The motor speed curve is as follows: there are two decelerations from rated speed to 0 within one motion cycle, ignoring the load torque, friction torque, and energy consumption of servo motor coil resistance during the deceleration process.

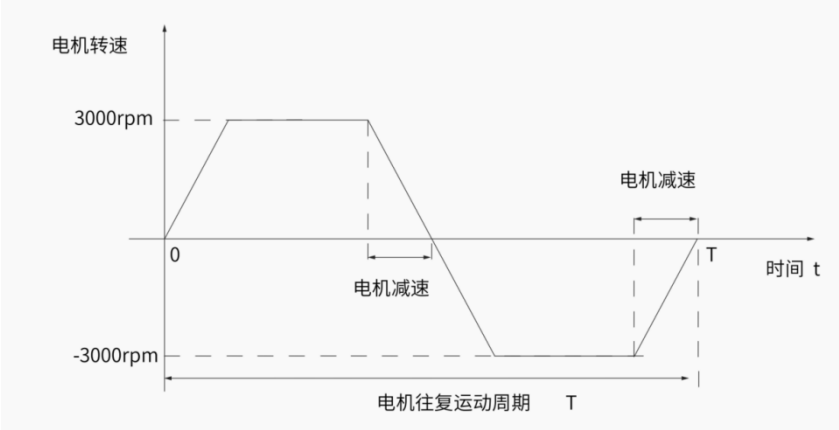

Figure 3.19 diagram of acceleration and deceleration motion cycle of motor

step	Calculation project	symbol	Calculation formula and explanation
1	Rotating energy of servo system	E_i	Calculate based on the load inertia ratio Jr, actual rotational speed W, and the number of decelerations N during the motion cycle, combined with Table 3.7 Em
2	Find the absorbed energy of the servo unit	E_C	Select according to Table 3.7 based on the servo model
3	Calculate the energy consumed by the regenerative resistor	E_K	$E_K = E_i - E_C$
4	Calculate the average power of the regenerative resistor	W_K	$W_K = E_K$ /（0.2xT）

Table 3.5 Calculation Table of Servo Regenerative Resistance Power

Attachment: ES-EK unit is joules; WK unit is watts; T is the cycle of repeated operation of the servo motor, unit is seconds; In the calculation formula of WK in the table above, 0.2 is the value when the load rate of the regenerative resistor is 20%. The load rate of the regenerative resistor is related to the heat dissipation conditions, and an appropriate coefficient can be selected for calculation according to the following text.

The capacity of the regenerative resistor should be set to a value that matches the allowable capacity of the connected external regenerative resistor. The set value varies depending on the cooling state of the external regeneration resistor.

- When using self cooling method (natural convection cooling): set to a value below 20% of the regenerative resistance capacity (W).
- When using forced air cooling method: set to a value below 50% of the regenerative resistance capacity (W)。

example When the capacity of the self cooling external regeneration resistor is 100W, 100W × 20%=20W. The servo related parameters can be changed by setting P00-05 to select the external braking ,and resistor heat dissipation method.

The energy data generated by the motor from a no-load speed of 3000rpm to a standstill is as follows：

Motor capacity (W)	Servo motor mode	Inertia kg.cm^2	Braking energy generated from a no-load speed of 3000rpm to a standstill Em (J)	The maximum braking energy that can be absorbed by a capacitor

				Ec(J)
100	40HK-A00330-CS2B2	0.06	0.3	14.7
	40HK-A00330-CS2B3	0.08	0.4	
200	60HK-A00630-CS2B2	0.3	1.48	
	60HK-A00630-CS2B3	0.32	1.58	
	60HK-A00630-CS2B3-A	0.28	1.38	
400	60HK-A01330-CS2B2	0.65	3.21	
	60HK-A01330-CS2B3	0.67	3.31	
	60HK-A01330-CS2B2-A	0.52	2.57	
750	80HK-A02430-CS2A2	1.71	8.46	14.7
	80HK-A02430-CS2A3	1.8	8.9	
	80HK-A02430-CS2A2-A	1.48	7.32	
1000	80HK-A03230-CS2A2	2.15	10.63	24.9
	80HK-A03230-CS2A3	2.24	11.08	
	80HK-A04025-CM2A2-A	2.4	11.87	
1000	130HK-A04025-CS2A2	7.2	35.6	
	130HK-A04025-CS2A3	8.7	43.02	
	130HK-A04025-CS2A2-A	8.5	42.03	
1300	130HK-A05025-CS2A2-A	12.6	62.31	37.4
1500	130HK-A06025-CS2A2	10.3	50.93	
	130HK-A06025-CS2A3	11.8	58.35	
	130HK-A10015-CS2A2-A	19.4	95.93	
2000	130HK-A07725-CS2A2	10.3	50.93	44.5（220V drive）32.7 (380V drive)
	130HK-A10020-CS2A2	12.7	62.8	
	130HK-A07725-CS2A2-A	15.3	75.66	
2300	130HK-A15015-CS2A2	19.7	97.42	
	130HK-A15015-CS2A2-A	27.7	136.98	
2600	130HK-A10025-CS2A2	12.7	62.8	
	130HK-A10025-CS2A2-A	19.4	95.93	
3000	130HK-A19015-CS2A2-A	35.4	175.05	

Table 3-6 R8 series servo energy absorption

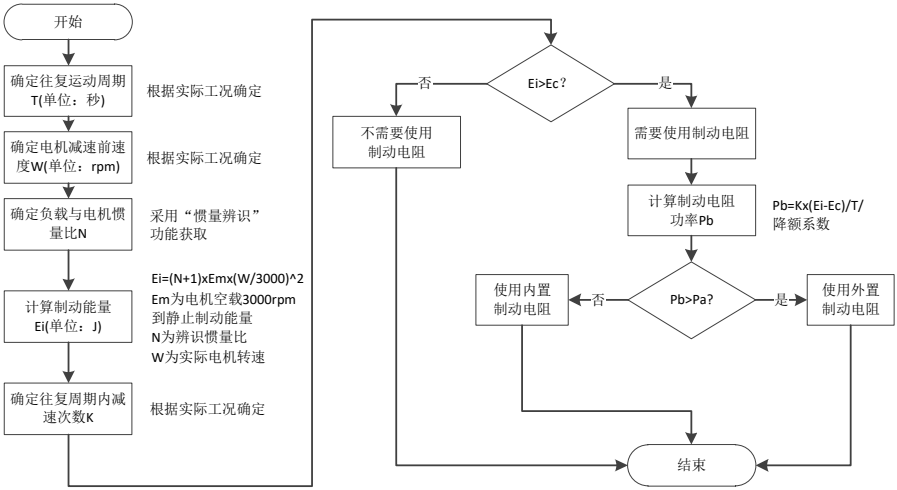

Figure 3.20 Calculation of Braking Resistors

- Example: A R8-2208P servo is paired with an 80HK-A02430-CS2A2 motor for reciprocating periodic motion. T= 2S， When operating at a maximum speed of 3000rpm and a load inertia ratio of 10.00, with 2 decelerations per cycle, the required braking resistor power is：

$$Pb = \frac{2\times[(N+1)\times Em-Ec]}{T}=\frac{2\times[(10+1)\times 8.46-14.7]}{2}=78.36\text{W}$$

When the braking energy is greater than the capacity of the built-in braking resistor Pa=40W (which can be found according to Table 3.5), and an external braking resistor needs to be used. The recommended power of the external braking resistor is Pb/(1-80%)=390W：

$$Pb = \frac{2\times[(N+1)\times Em\times(1500/3000)^2-Ec]}{T}=\frac{2\times[(10+1)\times 8.46\times 0.25-14.7]}{2}=8.56\text{W}$$

When the braking energy is greater than the capacity of the built-in braking resistor Pa=40W ,no need add an external braking resistor。

If the driver operates at an ambient temperature above 50 ℃, please use it with a rated built-in resistance of 20%.

Use an external braking resistor

When Pb>Pa An external braking resistor needs to be connected. At this point, depending on the cooling method of the braking resistor, set P00.05 to 2 or 3.

When the external braking resistor needs to be reduced by 80%,that is：$P_r=P_b/(1-80\%)$,And ensure that it is greater than the minimum resistance value allowed by the driver.Connect the two ends of the external braking resistor to "P ⊕" and "C" respectively, and remove the wire between terminals "P ⊕" and "D".

Please refer to Chapter 3.2 Wiring and Terminal Definitions for the wire specifications. According to the different cooling methods of the braking resistor, set P00-05 to 1 or 2 and confirm the following parameters:

Function code	Data name	Set range	unit	value	Effective method	Set method	Set mode
P00-06	External regenerative resistor power	1~65535	W	40	Effective immediately	Stop Set	Ordinary users
P00-07	External regenerative resistor resistance value	1~1000	Ω	50	Effective immediately	Stop Set	Ordinary users

Related parameters

Function code	Data name	Set range	unit	value	Effective time	Set method	Set mode
P00-05	Select set	0- Use built-in regenerative resistor 1. Use an external regenerative resistor 2. Use an external regeneration resistor and cool it down with a fan 3- Do not use regenerative resistors	--	0	immediate	Stop set	Ordinary users
P00-06	resistor power	1~65535	W	40	immediate	Stop set	Ordinary users
P00-07	resistor value	1~1000	Ω	50	immediate	Stop set	Ordinary users

- **Reverse charging state with load torque**

In some special situations, the motor torque output is opposite to the direction of rotation, and the motor performs negative power. External energy is generated by the motor and fed back to the driver. When the load is in a continuous power generation state, it is recommended to adopt a common DC bus scheme or use external braking resistors to release the energy of the bus capacitor.

Taking 750W (rated torque 2.39N · m) as an example, when the external load torque is 60% of the rated torque and the speed reaches 1500rpm, the power feedback to the driver is (60% × 2.39) × (1500 × 2 π ÷ 60)=225W. Considering that the braking resistor needs to be reduced by 80%, the power of the external braking resistor is 225 ÷ (1-80%)=1125W, and the resistance value is 50 Ω

4 panel display and button operation

4.1 Panel Composition

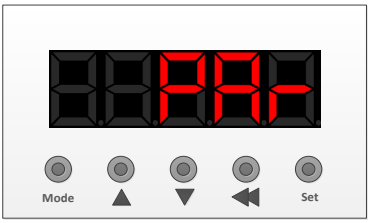

Figure 4-1 LED panel

As shown in the above figure, Samkoon R8 series servo drive panel consists of five digital tubes and five buttons. The functions of the buttons are shown in the table below：

Table 4-1 LED panel button function

Name	Function
Tubes	5-digit digital tubes
Mode	Mode/Return button, switch menu/return to previous level
▲	Flip up key, menu page/numerical increase
▼	Flip down button, menu page/numerical decrease
◀◀	Shift, shift operation when setting values
Set	Set button, confirm settings

4.2 Menu Structure

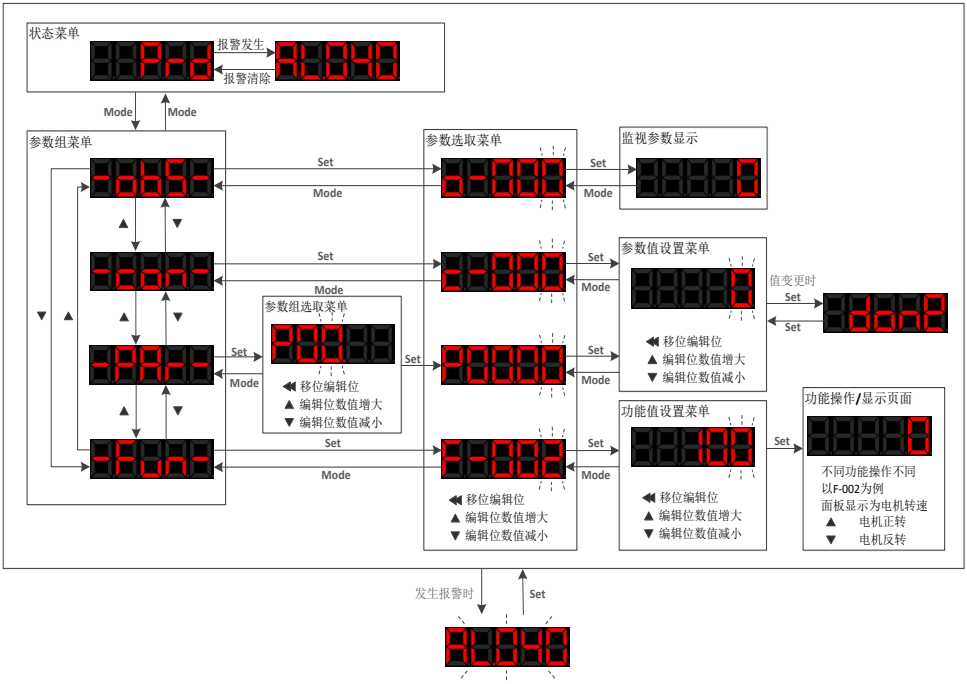

Figure 4-2 LED menu structure diagram

4.3 servo panel common displays

display	name	Display occasion	description
	Servo not ready	initialization completed, but the drive is not ready.	1.Abnormal servo power supply 2.Servo three-phase detection abnormality
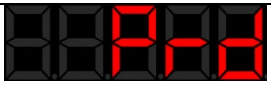	Position mode ready	set to position mode	Position mode and ready.
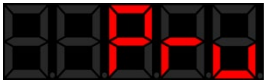	Position mode enables effective signal	set to position mode	Position mode and servo running
	Speed mode ready	set to speed mode	Position mode and ready.
	The speed mode enables signal is valid	set to speed mode	Position mode and servo running
	Torque mode ready	set to torque mode	Position mode and ready.
	The torque mode enable signal is valid	set to torque mode	Position mode and servo running

Figure 4.3 common panel display diagram

4.4 Monitoring Display

The P13 are the drive monitoring parameter group, which can be used to monitor the operating status of the servo drive。

By setting the function code P00-08 when servo is power on (default monitoring parameter on the panel), the display panel will automatically switch from the "servo status display interface" to the "monitoring parameter display interface". The parameter group where the parameter is located is the P13 monitoring parameter group, turn to group number P00-08 set value。

The P00-08 parameter have set “-1” by default, and the function is not turned on. The parameter is a decimal digits, with the lower 2 digits representing the group ID and the upper 2 digits representing the parameter group ID. If set to 1921, since the parameter group ID is in hexadecimal and the group ID is in decimal, the actual displayed value is the P13-21 bus voltage monitoring value。

The relevant function codes are as follows：

Code	Name	Set range	unit	value	Effective Mode	Set mode	Relevant Mode
P00-08	Panel default data	-1~32767	-	-1	Effective immediately	anytime	Ordinary user

4.5 Auxiliary Function Parameters (Fun Group Parameters)

Auxiliary functions are used to perform functions related to setting and adjusting servo units.

Display on the panel , Read as P12 group of auxiliary function parameters in the upper software or 485 bus.

4.5.1 F-000 servo restart

The servo restart function can perform a soft reset of the servo and restore the power on state of the servo drive.

Figure 4.4 servo restart diagram

Code	Name	Set range	unit	value	Effective Mode	Set mode	Relevant Mode
P12-00	Servo restart	0-none operate 1-servo restart 2-restore factory mode	--	0	Effective immediately	anytime	Ordinary user

4.5.2 F-001 Alarm clear

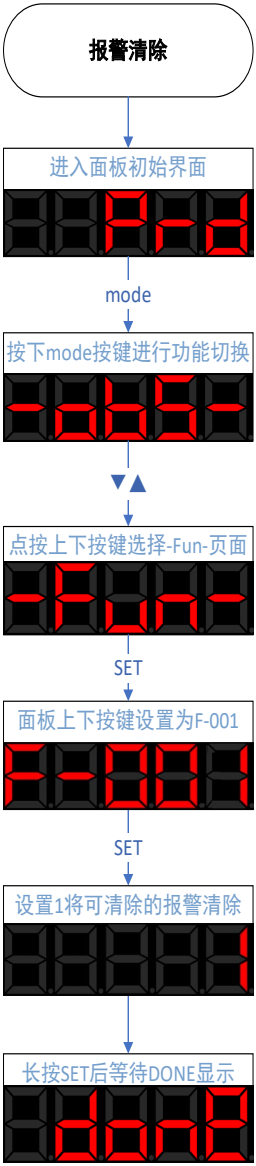

Figure 4.5 Alarm clear diagram

The alarm clearing function can clear the current alarm and restore the

servo operation status. There are two ways to clear the alarm:

① Write '[1] Clear current alarm' through the function code 'F-001 Alarm Clear'.

② Use the DI terminal to input the alarm clearing signal. By default, DI2 is configured with the alarm clearing function ("P1-05 DI2 terminal function selection" is set to "[2] alarm clearing"). when DI2 input “ON” will trigger the alarm clearing action.

➢ **Attention**

- If you need to clear the alarm when the enable signal is in effect, please set the P0B-29 parameter to 1
- Please check and eliminate the cause of the alarm before the alarm clearing action. If the current alarm condition still exists, the alarm clearing action will not take effect。
- For some alarms that need to be eliminated by changing parameter settings, it is important to confirm whether the modified parameters need to be restarted to take effect, such as the "AL.113 restart prompt" is a low priority warning and will not prompt when there are other alarms present.

Not all alarms can be cleared. You can check and confirm whether the alarm can be cleared through the "6.3.1 Software Alarm Attribute Table"

4.5.3 F-002 JOG enable

To test operate the servo motor and driver, the JOG operation function can be used to confirm whether the servo motor can rotate normally, and whether there are any abnormal vibrations or sounds during rotation. This parameter can be set through the panel.

The operation of JOG is located in Fun-002, and the servo drive needs to be in the non enable and non alarm state at this time.

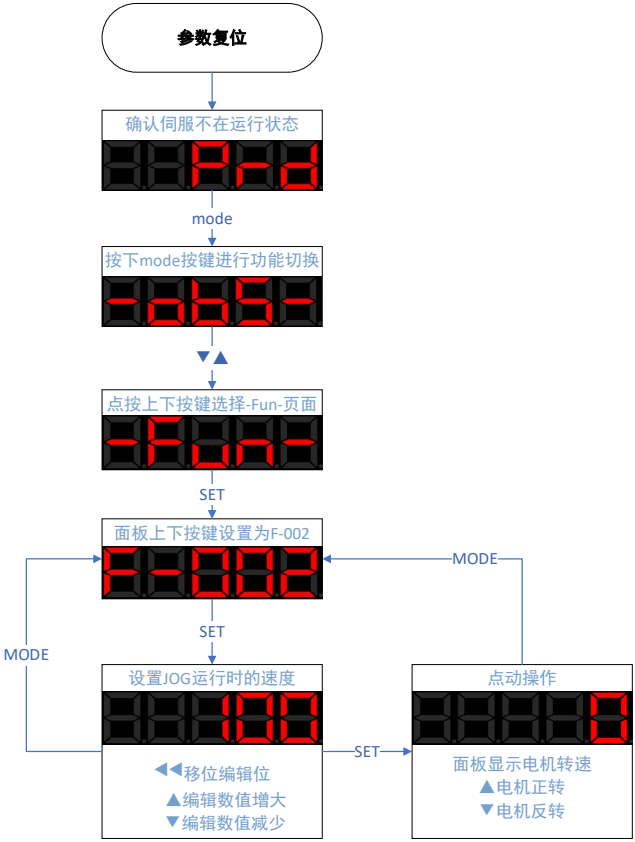

Figure 4.6 JOG test running diagram

4.5.4 F-003 Inertia identification

Inertia identification is the foundation of debugging. When ensuring that the motor has a movable stroke of more than 1 circle in both directions,. If the stroke does not meet the requirements or the load inertia ratio is too large (>30 times), please estimate a suitable inertia ratio and set value to C-011. The process of inertia identification is shown in the following figure：

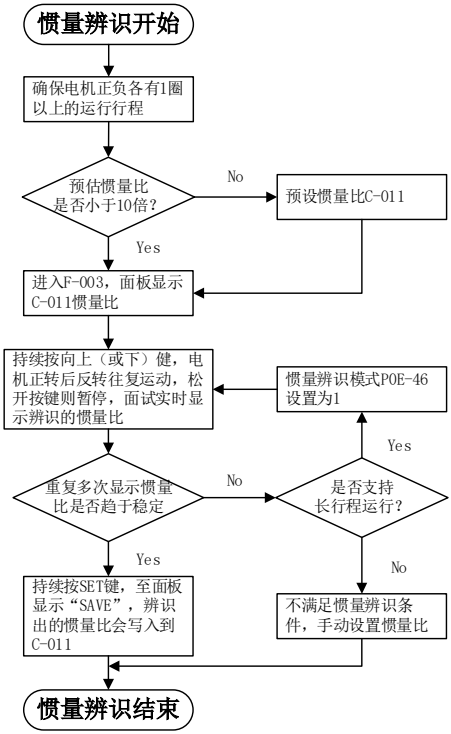

Figure 4-7 process of inertia identification

➢ Precautions：

- If under the default value of C-011=100%, the actual speed cannot keep up with the command due to the inertia ratio being too small, resulting in identification failure, the load inertia ratio C-011 needs to be preset. The preset value is recommended to gradually increase from 500% until it can be identified normally.。

- Offline inertia identification mode is generally recommended to use triangular wave mode. If there are situations where the identification effect is not good, try using step rectangular wave mode.
- Pay attention to the mechanical stroke when P0E-46=1 to prevent accidents caused by overtravel during offline inertia identification.

Relevant code below：

Code	Name	Set range	unit	value	Effective Mode	Set mode	Relevant Mode
P0E-46	Offline inertia identification mode	0 – triangular wave mode 1 – JOG mode		0	Effective immediately	Stop set	ALL
P0E-47	Offline inertia identification speed amplitude	100~1000	rpm	500	Effective immediately	Stop set	ALL
P0E-48	Offline inertia identification acceleration and deceleration time	20~800	ms	125	Effective immediately	Stop set	ALL
P0E-49	Offline inertia identification waiting time	50~10000		800	Effective immediately	Stop set	ALL
P0E-50	Offline inertia identification of stroke cycles				-	display	ALL

Conditions for effective inertia identification：

- The actual maximum speed of the motor is higher than 150rpm；
- The actual speed during acceleration and deceleration reaches the rated speed；
- The load torque is relatively stable and cannot undergo drastic changes；
- Maximum identifiable inertia of 30 times；
- When the mechanical rigidity is extremely low or the backlash of the transmission mechanism is large (such as chains), it may be identification failure。

4.5.5 F-004 Absolute encoder function

This parameter is an encoder related parameter that can be used to modify encoder related functions

When P12-04 is set to 1, it can clear alarms such as AL.41 (absolute encoder counting abnormal), AL.43 (absolute encoder multi turn counting error), AL.44 (absolute encoder multi turn counter overflow), AL.45 (absolute encoder battery failure), AL.46 (absolute encoder battery alarm), AL.47 (absolute encoder overheating), etc.

When P12-04 is set to 2, the absolute encoder can be reset and restarted

When P12-04 is set to 3, the absolute encoder single turn data can be reset to zero. Please refer to section 5.11 for modification of this function. Do not change it arbitrarily, otherwise it will cause abnormal motor electrical angle.

Code	Name	Set range	unit	value	Effective Mode	Set mode	Relevant Mode
P12-04	Absolute encoder reset operation	0-non operate 1-Absolute encoder reset alarm 2-Absolute encoder reset 3-single turn data reset to 0	--	0	Effective immediately	Stop set	Ordinary user

4.6 user password

After the user password (P00-12) function is enabled, the user holds the parameter setting permission, and other operators can only view and cannot change the parameter values.

After setting the user password, it will take effect when powered on again. If P.lock is displayed when modifying other parameters, enter P00.12 parameter, press and hold the SET button, and then write the password again

Code	Name	Set range	unit	value	Effective Mode	Set mode	Relevant Mode
P00-12	Use password	0~65535	-	0	Effective immediately	Stop set	P
P00-	Set	0~65535	-	0	Effective	Stop	P

14	password				immediately	set	

- Attention: If you forget your user password, you can contact the factory technical support

The steps for setting a user password are as follows:

Figure 4.8 user password set diagram

5 Operation and Debugging

5.1 Instructions for Using Position Mode

According to the position instructions of the upper computer (such as pulse input) or the internal position instructions of the servo, the main steps for position control are as follows:

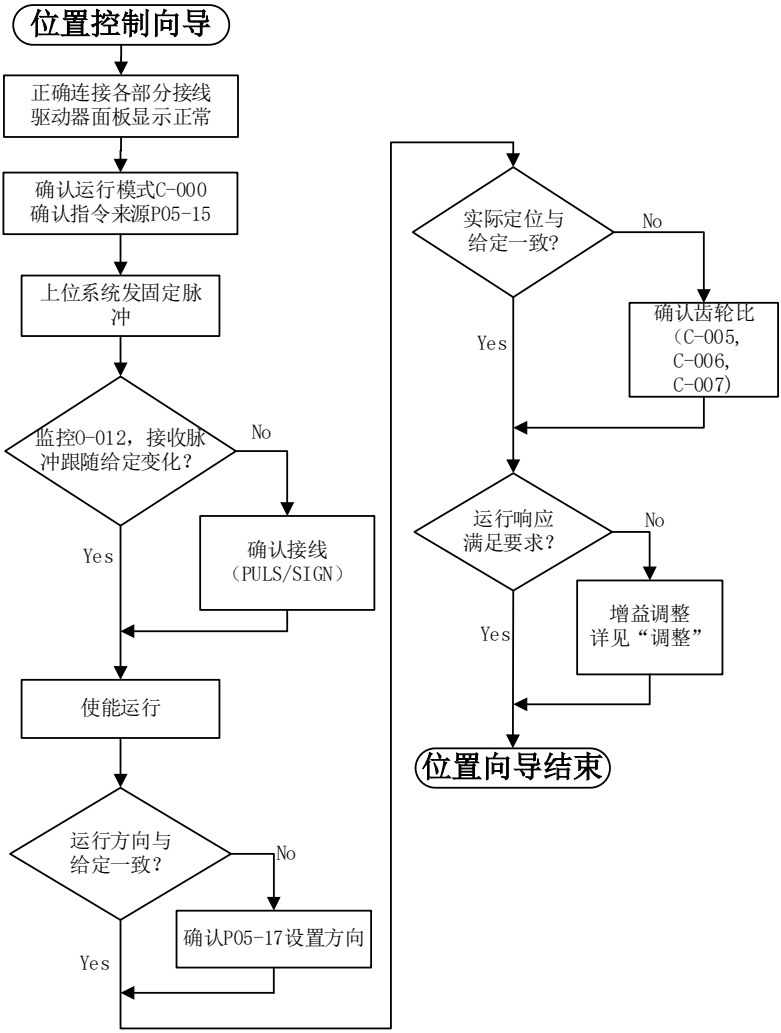

Figure 5-1 position mode set diagram

5.1.1 position mode wiring

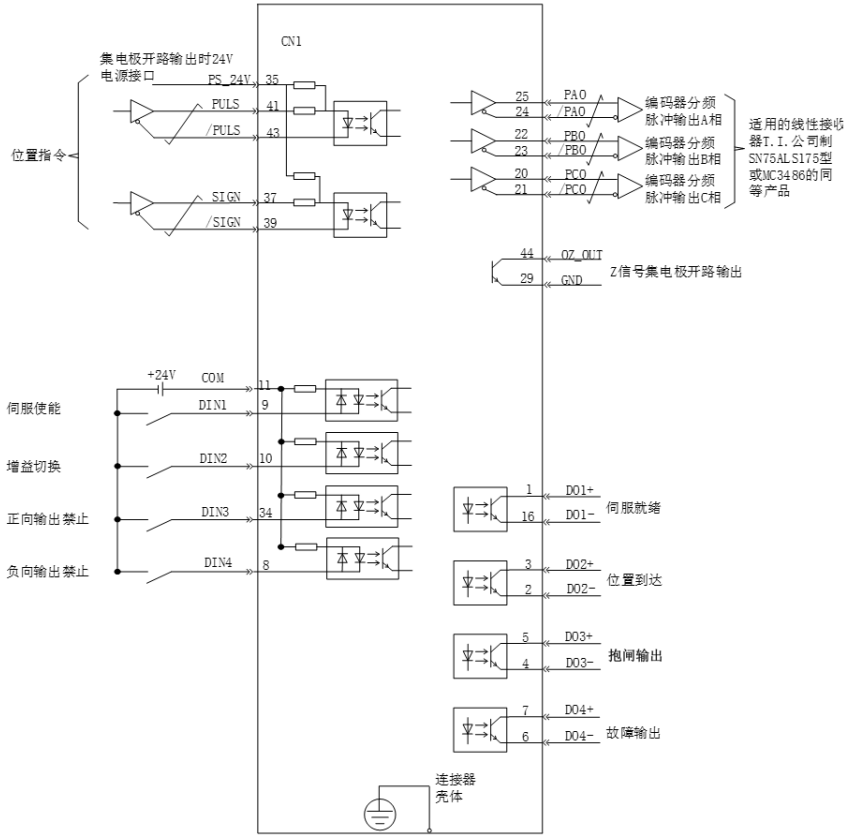

➢ Precautions：

- Signal cables and power cables must be wired separately, with a minimum distance of 30cm between them；
- When connecting signal cables due to insufficient length, the shielding layer must be reliably connected and grounded;
- +5V is referenced to GND, and+24V is referenced to COM -. Do not exceed the maximum allowable current, otherwise the driver will not function properly.

5.1.2 Function code settings related to position control mode

Parameter settings in position control mode, including mode selection, command pulse form, electronic gear ratio, DI/DO, etc.。

1) Position command input settings

a) Position instruction source

Set function code P05-15, specify position command source

Code	Name	Set range	unit	value	Effective Mode	Set mode	Relevant Mode
P05-15	Position instruction source	0- Pulse input 1- High speed pulse input 2- Divided output OA and OB signals 3- Constant at 0 4- Internal multi-stage position input	-	0	Effective immediately	Stop set	P

b) Position command direction switching

By setting the DI function FunIN.27, it is possible to use DI to control the direction switching of position commands, meeting the needs of direction switching

Code	Function name	description	Note
FunIN.27	Position instruction direction	Invalid - positive direction Effective - Reverse Direction	The recommended logic selection for the corresponding terminal is to set it as: level valid

c) Pulse command form

Set function code P05-16 and select the form of external pulse

command, including "direction+pulse", "orthogonal pulse", and "CW+CCW"。

Function code P05-17 can be set to reverse the instruction pulse signal. For example, in the "direction+pulse" mode, a value of 0 indicates positive logic, and a value of 3 indicates negative logic.

Code	Name	Set range	unit	value	Effective Mode	Set mode	Relevant Mode
P05-16	Command pulse form	0- Pulse+direction 1- AB phase (4x frequency) 2 – CW + CCW 3- AB phase (1x)	-	0	Effective restart	Stop set	P
P05-17	Reverse the instruction pulse signal	0- Pulse and Sign are not reversed 1- Pulse is reversed, Sign is not reversed 2- Pulse is not reversed, Sign is reversed 3- Pulse and Sign are both reversed	-	0	Effective restart	Stop set	P

The principles of the three types of pulse command forms are shown in the table below

Pulse command form	Positive Logic		Negative Logic	
	Forward	Reverse	Forward	Reverse
Direction+ pulse	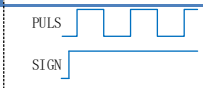	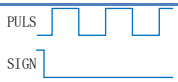	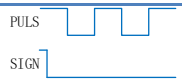	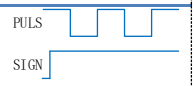
Orthogonal pulse (A-phase+B-phase)	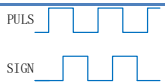	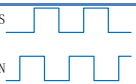		
CW+CCW	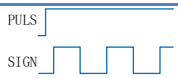 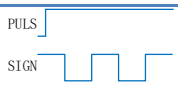	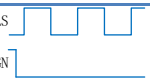 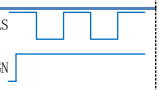		

d) Selection of instruction pulse filter

Select the appropriate pulse filter based on the frequency of the highest pulse, which can be set through parameter P05-18. If choosing an inappropriate filter may result in the loss or increase of pulses received by the servo unit.

Code	Name	Set range	unit	value	Effective Mode	Set mode	Relevant Mode
P05-18	Pulse signal filtering time	0~255	-	25	Effective restart	Stop set	P

e) Pulse input prohibited

Disable pulse command input by setting DI function FunIN.13。

Code	Function name	description	Note
FunIN.13	Position instruction prohibited	Effective - Prohibit position command Invalid - Allow location command	set to level valid

2) Electronic gear ratio setting

Set the electronic gear ratio according to the actual situation.

Code	Name	Set range	unit	value	Effective Mode	Set mode	Relevant Mode
P05-00	Single cycle pulse count	0~1048576	-	10000	Effective restart	Stop set	P
P05-02	Electronic gear ratio 1 (molecular)	1~1073741824	-	1	Effective immediately	Running set	P
P05-04	Electronic gear ratio 1 (denominator)	1~1073741824	-	1	Effective immediately	Running set	P
P05-06	Electronic gear ratio 2 (molecular)	1~1073741824	-	1	Effective immediately	Running set	P
P05-08	Electronic gear ratio 2 (denominator)	1~1073741824	-	1	Effective immediately	Running set	P

The principle of electronic gear ratio is shown in the following figure

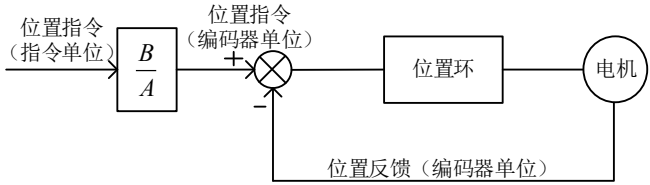

Figure 5-3 Principle diagram of electronic gear ratio action

When P05-00=0:：

The motor and load are connected through a reduction gear. Assuming that the reduction ratio between the motor shaft and mechanical load shaft is n/m (the electric shaft rotates m turns and the load shaft rotates n turns), the calculation formula for the electronic gear ratio is as follows：

$$\text{电子齿轮比}\frac{B}{A}=\frac{P05-02}{P05-04}=\frac{\text{编码器分辨率}}{\text{负载轴一圈移动量（指令单位）}}\times\frac{\text{m}}{n}$$

The R8 servo supports up to 2 sets of electronic gear ratios and can use the gear ratio switching function (FunIN. 24) to complete gear ratio selection

When P05-00 ≠ 0：

$$\text{电子齿轮比}\frac{B}{A}=\frac{\text{编码器分辨率}}{P05-00}$$

At this time, the gear ratio is not related to P05-02, P05-04, P05-06, P05-08,and the gear ratio switching function is invalid.

3) Position instruction filtering setting

The position command smoothing function refers to filtering the input position command to make the rotation of the servo motor smoother. This function has a significant effect in the following situations

- The output pulse command of the controller device has not undergone acceleration/deceleration processing, and the

acceleration/deceleration speed is very high；

- The instruction pulse frequency is too low；
- The electronic gear ratio is more than 10 times。

Note: This function has no effect on the displacement (total number of position commands).

The settings for the parameters related to the position command smoothing function are as follows

Code	Name	Set range	unit	value	Effective Mode	Set mode	Relevant Mode
P05-20	First order low-pass filtering time constant	0.0~6553.5	ms	0.0	Effective immediately	Stop set	P
P05-21	Mean filtering time constant	0.0~128.0	ms	0.0	Effective immediately	Stop set	P

When the value is set to 0, the filter becomes invalid.

First order low-pass filtering time constant	Mean filtering time constant
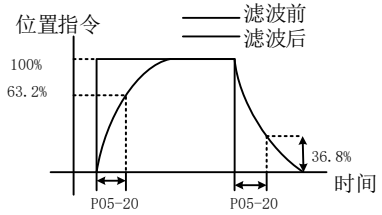	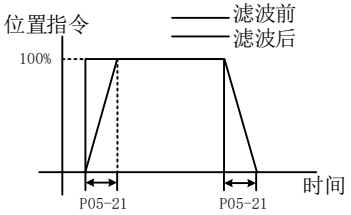
	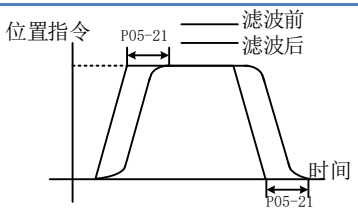

4) Position deviation clearing function

By setting the DI function FunIN.35, DI can be used to control whether to reset the position deviation.

Code	Function name	description	Note
FunIN.35	Clear position deviation (Edge effective function)	Effective - Clearance of Position Deviation Invalid - Position deviation not reset to zero	The logical selection of corresponding terminals, Suggested setting: Edge valid。

5) Frequency division output function

The servo pulse output source is selected by P05-25, and the pulse command synchronous output function is generally used in synchronous control situations

Code	Name	Set range	unit	value	Effective Mode	Set mode	Relevant Mode
P05-25	Selection of pulse input source	0- Encoder frequency division output 1- Pulse command synchronous output 2- Prohibit output 3- Parameter triggered output	-	0	Twice power on	Stop set	ALL

By setting P05-32, the pulse output signal type can be selected.

Code	Name	Set range	unit	value	Effective Mode	Set mode	Relevant Mode
P05-32	Pulse output signal type	0-AB phase 4x frequency 1- Pulse+ Direction 2 – CW+CCW 3 -AB phase,	-	0	Effective immediately	Running set	ALL

		1xfrequency					

By setting P05-30, the servo driver will divide the frequency according to the set value and output it through the frequency division output port . The P05-30 set value corresponds to the number of pulse outputs。

Code	Name	Set range	unit	value	Effective Mode	Set mode	Relevant Mode
P05-30	Pulse output Number of single-phase pulses	0~2147483647	P/r	2500	Power on again	Stop set	ALL

For example, when the pulse output signal type is selected as 0 (AB phase, 4x frequency), the motor rotates once, and A/B phases output P05-30 pulses orthogonally。

Forward rotation (A leads B phase by 90 °)	reverse rotation (B leads A phase by 90 °)
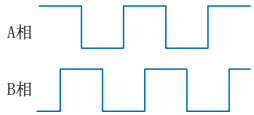	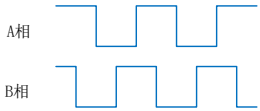

The phase shape of the output pulse feedback can be adjusted through P05-26

Code	Name	Set range	unit	value	Effective Mode	Set mode	Relevant Mode
P05-26	Pulse output phase	0 – Take the CCW direction as the forward rotation direction（A ahead of B） 1 – Take the CW direction as the forward rotation	-	0	Power on again	Stop set	ALL

		direction（B ahead of A）					

The parameters related to single-phase output OZ signal are configured as follows:：

Adjust the effective current level of Z-pulse output by P5-27

Code	Name	Set range	unit	value	Effective Mode	Set mode	Relevant Mode
P05-27	Z-pulse output effective current level	0- Low level effective 1- High level effective	-	1	Power on again	Stop set	ALL

Adjust the Z-pulse dead time through P05-39

Code	Name	Set range	unit	value	Effective Mode	Set mode	Relevant Mode
P05-39	Z pulse signal dead time	0~30000	0.0001°	3	Stop restart	anytime	ordinary

Adjust the pulse width of Z signal by P05-76

Code	Name	Set range	unit	value	Effective Mode	Set mode	Relevant Mode
P05-76	Z-signal pulse width	0~1000	250μs	8	Stop restart	Stop set	ordinary

5.2 speed mode description

The speed control mode is divided into internal speed mode and analog input mode according to different command sources. Its usage steps are as follows：

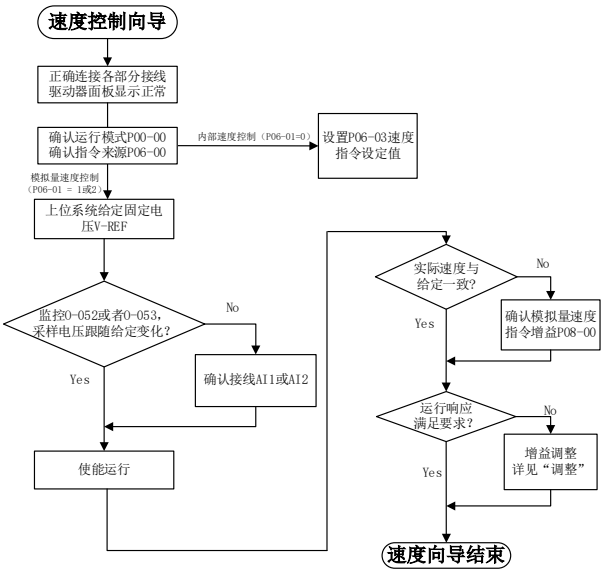

Figrue 5-4 Speed mode usage process

5.2.1 Speed mode wiring：

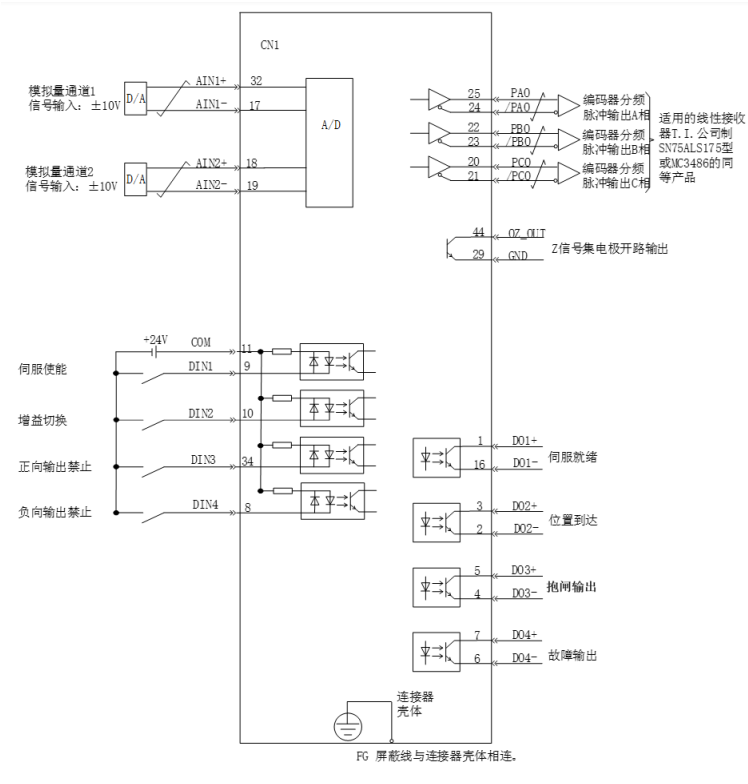

Figure 5-5 Speed mode wiring

≠ means twisted pair cables

Note ：

- Signal cables and power cables must be wired separately, with a minimum distance of 30cm between them；
- When connecting signal cables due to insufficient length, the shielding layer must be reliably connected and grounded；
- +5V is referenced to GND, and+24V is referenced to COM -. Do not exceed the maximum allowable current, otherwise the driver will not function properly

5.2.2 speed mode related function codes

1） Speed command input set

a） speed command source

In speed control mode, there are two sources for speed commands: source A and source B

Code	Name	Set range	unit	value	Effective Mode	Set mode	Relevant Mode
P06-00	Speed command selection	0 -command A 1 -command B 2 -command A and command B both 3 –command A or command B switch	-	0	Effective immediately	Stop set	S
P06-01	Source of Speed Instruction A	0 – user data give by P06-03 1 – AI1 2 – AI2	-	0	Effective immediately	Stop set	S
P06-02	Source of Speed Command B	0 – user data give by P06-03 1 – AI1 2 – AI2	-	0	Effective immediately	Stop set	S
P06-03	Speed command digital setting value	-6000~6000	rpm	200	Effective immediately	Stop set	S
P06-04	Jogging speed setting value	0~6000	rpm	1000	Effective immediately	Stop set	S

Among them：

- Keyboard setting, refers to storing speed value through function code P06-03 and using it as a speed command.
- Simulated speed command source refers to AI input signals into for controlling motor speed. Using AI1 as an example to illustrate the method of setting speed commands.

Table 4-4 Analog Set Speed Command

step	Operation method	Note
1	Set command source as AI1 input P06-00 = 0 P06-01 = 1	Set the speed command source in speed control mode
2	Adjust AI1 related parameters: ● Offset setting P08-02 ● Dead zone setting P08-05	Adjust AI1 sampling through offset and dead zone settings
3	P08-00 Set the speed command value corresponding to 10V	Specify the maximum forward speed value corresponding to+10V Specify the maximum negative speed value corresponding to -10V

When there is interference in the AI1 input signal, the AI1 low-pass filtering parameter P08-03 can be set for filtering processing.

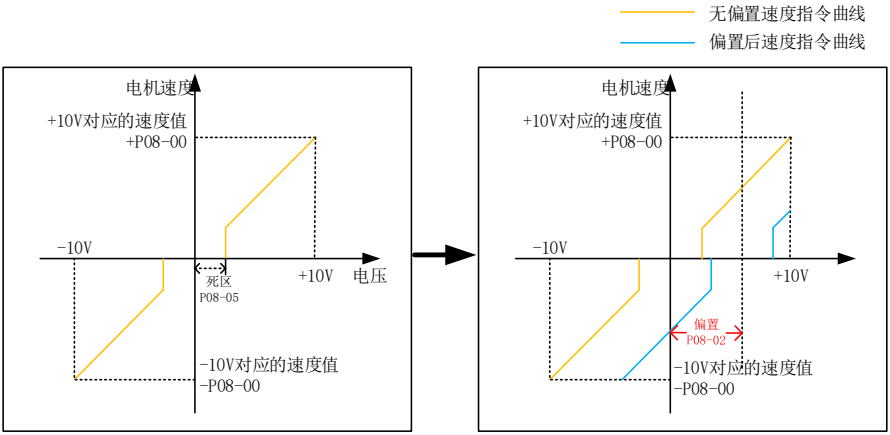

The given speed command value can be viewed through O-003.

- Multi segment speed instructions refer to users selecting internal registers through external DI or internal specified methods, with 16 sets of speed instructions and related control parameters.
- Jogging speed command refers to the user configuring two external DI or upper computer control software to set the jogging operation function (FunIN.18, FunIN.19), using the speed value stored in function code P06-04 as the jogging operation speed, and selecting the direction of the speed command based on the DI

status.

b） Speed command direction switching

By setting the function code FunIN.26, DI can be used to control the direction switching of speed commands, meeting the needs of direction switching.。

Code	Function name	description	Note
FunIN.26	Speed command direction set	Invalid - positive direction valid - Reverse Direction	The recommended logic selection for the corresponding terminal is to set it as: current level valid

c） Speed command selection

The speed control mode has the following four ways to obtain speed commands, which are set through function code P06-00.

Code	Name	Set range	unit	value	Effective Mode	Set mode	Relevant Mode
P06-00	Speed command selection	0 -command A 1 -command B 2 -command A and command B both 3 –command A or command B switch	-	0	Effective immediately	Stop set	S

When the speed command selects "A/B switch",that is P06-00=3, a separate function definition needs to be assigned to the DI terminal. Through this input terminal, it is determined whether the current A or B command input is valid.

Code	Function name	description	Note
FunIN.4	Command switch	Invalid - The current running instruction is A Valid - The current running instruction is B	The recommended logic selection for the corresponding terminal is to set it as: current level valid

2） command ramp function setting

The ramp function control function refers to the process of converting rapidly changing speed commands into relatively smooth and constant acceleration and deceleration speed commands, and controlling acceleration and deceleration by setting acceleration and deceleration times. In speed control mode, if the given speed command changes too much, it will cause the motor to jump or vibrate violently. If the acceleration and deceleration time of soft start is increased, the motor can start and stop smoothly, avoiding the occurrence of the above situation and causing damage to mechanical components.

Code	Name	Set range	unit	value	Effective Mode	Set mode	Relevant Mode
P06-05	Speed command acceleration ramp time constant	0 - 65535	ms	0	Effective immediately	Stop set	S
P06-06	Speed command deceleration ramp time constant	0 - 65535	ms	0	Effective immediately	Stop set	S

The ramp function control function converts step speed commands into smoother constant acceleration and deceleration speed commands, achieving smooth speed control (including internal set speed control).

P06-05：The time required for the speed command to accelerate from zero speed to 1000rpm.。

P06-06：he time required for the speed command to decelerate from 1000rpm to zero speed.。

The actual acceleration and deceleration time calculation formula is as follows:

Actual acceleration time=(speed command/1000) x speed command acceleration ramp time

Actual deceleration time=(speed command/1000) x speed command

deceleration ramp time

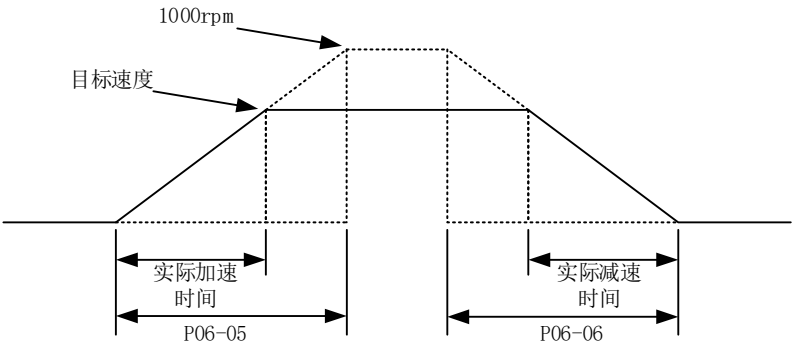

3） Speed command limit setting

In speed control mode, the servo drive can limit the value of the speed. Speed command limit as below：

- P06-07 sets the amplitude limit, and both forward and reverse speed will be limited within this value.。
- P06-08 sets the forward speed limit, and the forward speed will be limited within this value.
- P06-09 sets the reverse speed limit, and the reverse speed will be limited within this value.
- The maximum speed of the motor is the default limit point, and this parameter will change with the motor parameters when matching different motors.

Note ：

When function codes P06-07, P06-08, and P06-09 limit the speed, the minimum limit point is used as the limiting condition, as shown in the following figure. The forward rotation speed is limited to P06-08, and because the set value of P06-09 is greater than P06-07, the reverse rotation speed is limited to P06-07.

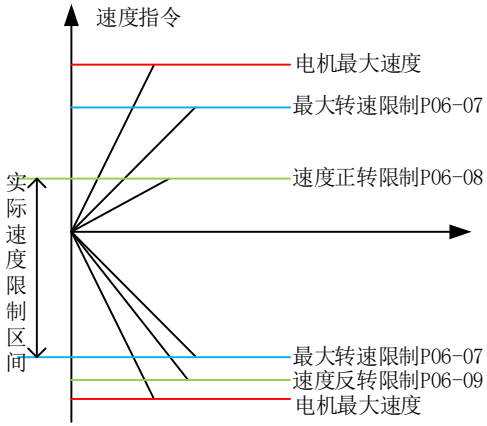

Note: The maximum speed of the motor is the default maximum limit point.

The actual motor speed limit range meets:

|The amplitude of the forward speed command | ≤ min {maximum motor speed, P06-07, P06-08}

|The amplitude of the reverse speed command | ≤ min {maximum motor speed, P06-07, P06-09}

Code	Name	Set range	unit	value	Effective Mode	Set mode	Relevant Mode
P06-07	Maximum speed threshold	0~6000	rpm	6000	Effective immediately	Stop set	S
P06-08	Positive speed threshold	0~6000	rpm	6000	Effective immediately	Stop set	S
P06-09	Reverse speed threshold	0~6000	rpm	6000	Effective immediately	Stop set	S

4） zero position fixing function

In speed control mode, if ZCLAMP is valid and the amplitude of the speed command is less than or equal to the speed value set by P06-11, the servo motor enters the zero position fixed state control. If

oscillation occurs at this time, the position loop gain can be adjusted. When the amplitude of the speed command is greater than the speed value set in P06-11, the servo motor exits the control of the zero position fixed state.

DI function selection：

Code	Function name	description	Note
FunIN.12	zero position fixing enable	valid-zero position fixing enable invalid-no zero position fixing	The recommended logic selection for the corresponding terminal is to set it as: current level valid

Relevant code：

Code	Name	Set range	unit	value	Effective Mode	Set mode	Relevant Mode
P06-11	Zero position fixed speed command threshold	0~6000	rpm	10	Effective immediately	Stop set	S

5.3 Instructions for using torque mode

The torque control mode is divided into internal torque mode and analog input mode according to different command sources, and its usage steps are as follows：

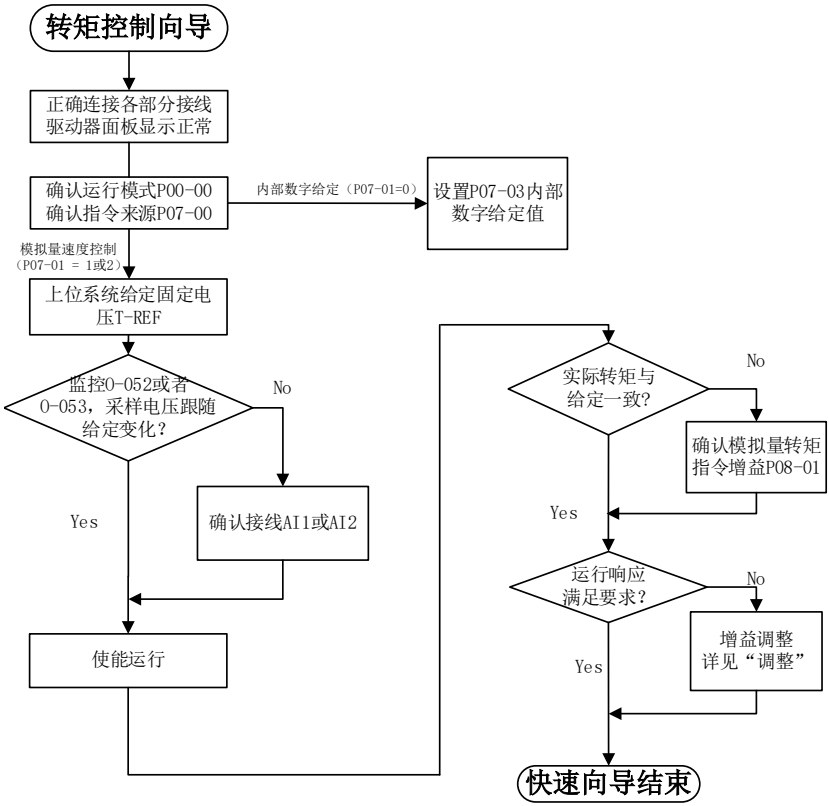

Figure 5-6 Torque Mode Usage Process

5.3.1 torque mode wiring

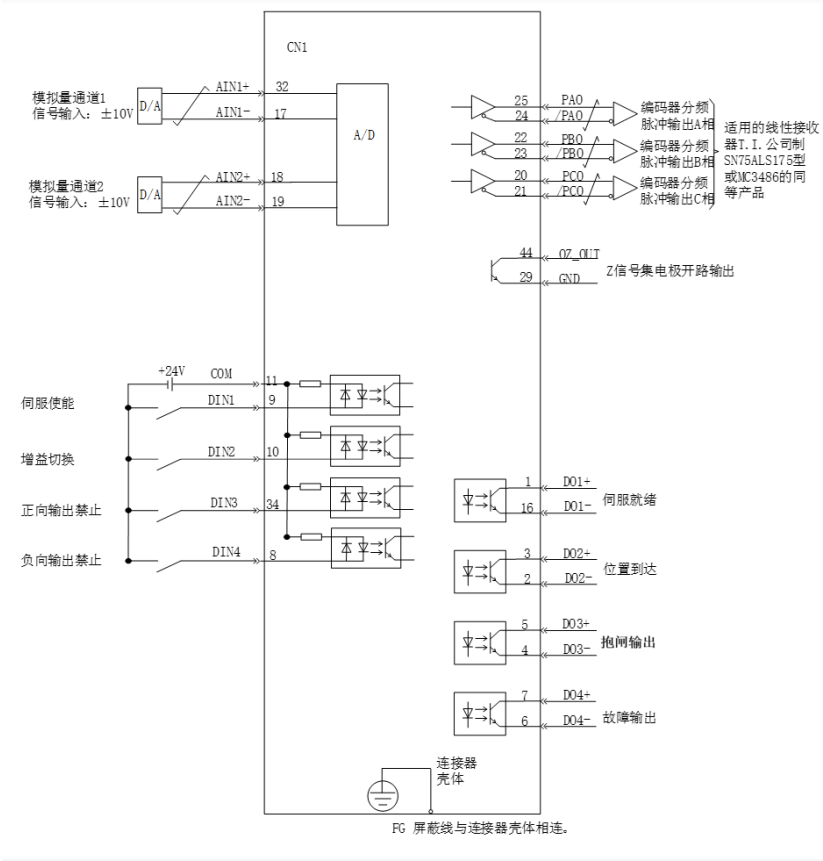

Figure 5-7 Torque Mode Wiring Diagram

≠ mean twisted pair cables

Note ：

- Signal cables and power cables must be wired separately, with a minimum distance of 30cm between them；
- When connecting signal cables due to insufficient length, the shielding layer must be reliably connected and grounded；
- +5V is referenced to GND, and+24V is referenced to COM -. Do not exceed the maximum allowable current, otherwise the driver will not function properly

5.3.2Setting of torque mode related function codes

1） Torque command input setting

a） Source of torque command

In torque control mode, there are two sources of torque commands: source A and source B. There are two ways to set it：

- keyboard settings. The percentage of the torque value stored in function code P07-03 to the rated torque is used as the torque command.
- Analog command source refers to the conversion of external input analog voltage signals into torque command signals for controlling motors. At this point, the correspondence between analog quantities and torque commands can be arbitrarily specified.

Code	Name	Set range	unit	value	Effective Mode	Set mode	Relevant Mode
P07-01	Source of torque command A	0 – Internal number given by P07-03 1 – AI1 2 – AI2	-	0	Effective immediately	Stop set	T
P07-02	Source of torque command B	0 – Internal number given by P07-03 1 – AI1 2 – AI2	-	0	Effective immediately	Stop set	T
P07-03	Torque command digital set value	-300.0~300.0	%	0	Effective immediately	Stop set	T

b） Torque command selection

The torque control mode has the following 5 ways to obtain torque commands, which are set through function code P07-00

Code	Name	Set range	unit	value	Effective Mode	Set mode	Relevant Mode
P07-00	Source of torque command A	0- Torque command A 1- Torque command B 2- Torque	-	0	Effective immediately	Stop set	T

		command A+B 3- Torque command A/B switching 4- Communication Given					

c） Direction switching of torque command

By setting the function code FunIN.25, DI can be used to control the direction switching of torque commands, meeting the needs of direction switching.

Code	Function name	description	Note
FunIN.25	Direction setting of torque command	valid-reverse direction Invalid - forward direction	The recommended logic selection for the corresponding terminal is to set it as: current level valid

When the torque command selects "A/B switching",that is H07-02=3, a separate function definition needs to be assigned to the DI terminal. Select whether the current input of command A or B is valid through this input terminal.

Code	Function name	description	Note
FunIN.4	Command switch	Invalid - The current running instruction is A Valid - The current running instruction is B	The recommended logic selection for the corresponding terminal is to set it as: current level valid

Using AI1 as an example to illustrate the method of setting torque commands.

Code	Name	Set range
1	Set the source as analog AI1 input P07-00 = 0 P07-01 = 1	Set the source of torque command。

2	Adjust AI1 related parameters: ● Offset setting P08-02 ● Dead zone setting P08-05	Through offset Dead zone setting, Adjust the sampling of AI1
3	P08-01 Set the torque command value corresponding to 10V	Specify the maximum forward torque value corresponding to+10V Specify the maximum reverse torque value corresponding to -10V

When there is interference in the AI1 input signal, the AI1 low-pass filtering parameter P08-03 can be set for filtering.

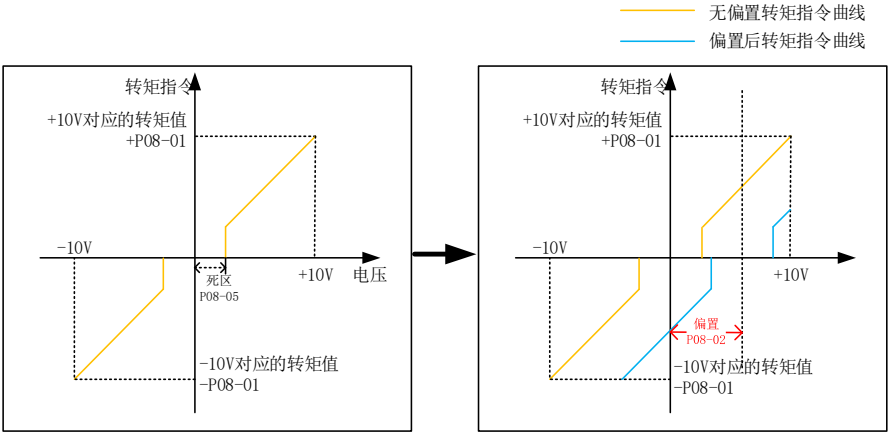

The given torque command (percentage relative to the rated torque of the motor) can be viewed through O-004.

2） Torque mode speed limit function

In torque control mode, to protect the machinery, it is necessary to limit the speed of the servo motor. When torque control is applied, the servo motor is only controlled by the output torque command and does not control the speed. Therefore, if the torque command is set too high, higher than the load torque on the mechanical side, the motor will continue to accelerate and overspeed. In this case, the speed limit value of the motor needs to be set.

When the speed exceeds the limit range, the speed difference

between the overspeed and the limit speed is converted into a certain proportion of torque, which is cleared in the negative direction to return the speed to the limit range. Therefore, the actual motor speed limit value may fluctuate due to different load conditions. The speed limit value (speed instruction during same speed control) can be given through internal or analog sampling.

DO function selection: After the motor speed is limited, the output signal is as follows

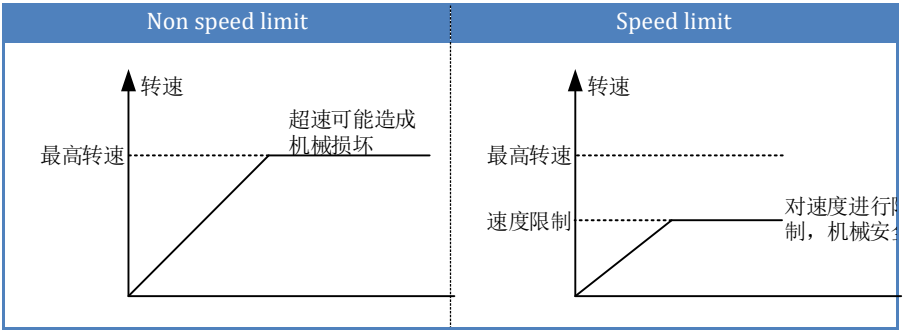

Code	Function name	description
FunOUT.9	Speed limit signal	valid-motor speed limit invalid-motor speed non limit

Note: The signal needs to be allocated to the corresponding digital output port.

The sources of speed limit include internal speed limit sources and external speed limit sources. When selecting the internal speed limit source (P07-12=0), directly set P07-13 to limit forward speed and P07-14 to limit negative speed. If P07-12=2, under FunIN.36 allocation, select P07-13 or P07-14 as the speed limit through DI. When P07-12=1 and selecting an external speed limit source, first specify the analog channel through P07-19, and then set the analog correspondence as needed. At this time, the external limit value should be smaller than the internal speed limit source to prevent danger caused by improper setting of the external speed limit source.

The speed limit method is set through the following function codes.

Code	Name	Set range	unit	value	Effective Mode	Set mode	Relevant Mode
P07-12	Speed limit source selection	0- Internal speed limit 1- Use analog limit 2- Use V-SEL to select limit values	-	0	Effective immediately	Running set	T
P07-19	V-LMT selection	0 – AI1 1 – AI2	-	1	Effective immediately	Running set	T
P07-13	Internal speed forward limit value	0~6000	rpm	3000	Effective immediately	Running set	T
P07-14	Internal speed reverse limit value	0~6000	rpm	3000	Effective immediately	Running set	T

3） Torque command limit setting

To protect the mechanical device, the output torque can be limited by setting the function code P07-04. There are five ways to select torque limitation：

Code	Name	Set range	unit	value	Effective Mode	Set mode	Relevant Mode
P07-04	Source of torque limitation	0- forward and reverse internal torque limit 1- forward and reverse external torque limitation (using P-CL and N-CL selection) 2- Use analog quantity to limit torque 3- forward and reverse external torque and analog limit torque (selected using P-CL and N-CL) 4- forward and reverse internal	-	0	Effective immediately	停机设定	T

		torque and analog limit torque (selected using P-CL and N-CL)					

DI function selection: Input forward/reverse external torque limit selection signal P-CL/N-CL.

Code	Function name	description	Note
FunIN.16	Forward external torque limit	According to the selection of P07-04, switch the torque limit source. When P07-04=1: valid - The external torque limit for forward rotation is valid; Invalid - The internal torque limit for forward rotation is valid. When P07-04=3 and the AI limit value is greater than the external limit value for forward rotation: valid - The external torque limit for forward rotation is valid. Invalid - AI torque limit is valid. When P07-04=4: valid - AI torque limitation is valid; Invalid - forward internal torque limit is valid。	The recommended logic selection for the corresponding terminal is to set it as: current level valid

FunIN.17	Reverse external torque limit	According to the selection of P07-04, switch the torque limit source. When P07-04=1: valid - Reverse external torque limitation is valid; Invalid - Reverse internal torque limit is valid. When P07-04=3 and the AI limit value is less than the reversal external limit value (negative comparison): valid - Reverse external torque limitation is effective; Invalid - AI torque limit is valid. P07-04=4: valid - AI torque limitation is valid; Invalid - Reverse internal torque limit is valid.	

DO function selection: Output torque limit confirmation signal C-LT。

Code	Function name	description	Note
FunOUT.8	Torque limit signal	valid – motor torque limit invalid – motor torque non limit	

Note: The signal needs to be allocated to the corresponding digital output port

For example, when setting up analog input AI, first specify the TLMT variable through function P07-18, and then set the corresponding relationship between torque and analog voltage.

When P07-04=1, the external torque limit for forward and reverse rotation is triggered by external DI settings (P-CL, N-CL), and torque is limited according to the values set for P07-07 and P07-08. When the external limits and their combination limits exceed the internal limits, the internal limits are taken, that is, due to the minimum limit value. The torque is limited within the maximum torque range of the motor. The TLMT is symmetrical, with a limit of | TLMT | value for forward rotation and reverse rotation

Code	Name	Set range	unit	value	Effective Mode	Set mode	Relevant Mode
P07-04	Source of torque command A	0- forward and reverse internal torque limit 1- forward and reverse external torque limitation (using P-CL and N-CL selection) 2- Use analog to limit torque 3- forward and reverse external torque and analog limit torque (selected using P-CL and N-CL) 4- forward and reverse internal torque and analog limit torque (selected using P-CL and N-CL)	-	0	Effective immediately	Stop set	PST
P7-18	T-LMT selection	0 – AI1 1 – AI2	-	0	Effective immediately	Stop set	PST
P07-05	Internal torque limit value for forward rotation	0.0~300.0 (100% =1x the rated torque)	%	300.0	Effective immediately	Run set	PST
P07-06	Reverse internal torque limit value	0.0~300.0 (100% =1x the rated torque)	%	300.0	Effective immediately	Run set	PST
P07-07	forward external torque limit value	0.0~300.0 (100% =1x the rated torque)	%	300.0	Effective immediately	Run set	PST

P07-08	Reverse external torque limit value	0.0~300.0 (100% =1x the rated torque)	%	300.0	Effective immediately	Run set	PST

4） Torque reached

The torque arrival function is used to determine whether the actual torque value has reached the set interval. When the actual torque reaches the torque threshold, the driver will output the corresponding DO signal (FunOut.4: torque reached) for use by the upper controller.

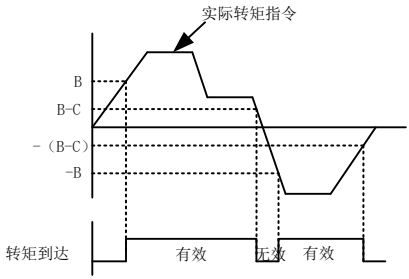

Actual torque command: A

Torque reaches reference value: B

Torque reaching hysteresis: C

When the torque reaches the DO signal from invalid to valid, the torque command needs to meet the following requirements:

$$|A| \geq B$$

When the torque reaches the DO signal from valid to invalid, the torque command needs to meet the following requirements:

$$|A| < B - C$$

Otherwise, the torque reaches the DO signal and remains in its current state.

Note that it is necessary to ensure that B>C, otherwise hysteresis will not work.

Code	Name	Set range	unit	value	Effective Mode	Set mode	Relevant Mode
P07-15	torque reaches the reference value	0~300.0	%	0.0	Effective immediately	Run set	ALL
P07-16	Torque reaches hysteresis	0~300.0	%	20.0	Effective immediately	Run set	ALL

DO Function selection: Output torque limit confirmation signal C-LT.

Code	Function name	description	Note
FunOUT.4	Torque reach signal	valid - The absolute value of the torque command is greater than the set value Invalid - The absolute value of the torque command is less than the set value	

Note: The signal needs to be allocated to the corresponding digital output port.

5.4 Hybrid Control Mode

The hybrid control mode refers to the ability of the servo driver to switch between different modes when the servo enable is ON and the servo state is "run".

There are four types of hybrid control modes.

- Position mode ↔ Speed mode
- Position mode ↔ Torque mode
- Speed mode ↔ Torque mode
- Speed mode ↔ Location mode ↔ Torque mode

By setting the function code P0000 through the panel or Samkoon driver debugging software, the servo driver will operate in hybrid control mode.

Code	Name	Set range	unit	value	Effective Mode	Set mode	Relevant Mode
P00-00	Mode selection	0-position mode 1-Speed mode 2-Torque mode 3-Position and speed mixed mode 4-position and torque hybrid mode 5-speed and torque hybrid mode 6-Mixed mode of position, speed, and torque 7- Reserved 8-EtherCAT bus mode	--	0	Effective immediately	Stop set	Ordinary user

When P00-00=3/4/5, please configure one DI terminal (one of P01-04~P01-07) of the servo drive as Function 10- Operating Mode Switching 0, and confirm the valid logic of the DI terminal;

When P00-00=6, please configure the two DI terminals (P01-04~P01-07) of the servo drive as Function 10- Operation Mode Switching 0 and Function 11- Operation Mode Switching 1, separately, and confirm the valid logic of the DI terminals.

☆Associated function code: (example: using DI3 and DI4 for allocation)

<table>
<tr><th>Code</th><th>Data name</th><th>Set function</th><th>Function</th></tr>
<tr><td>P01-06</td><td>DI3 terminal function selection</td><td>10-Operation mode switching 0</td><td>set the current control mode of the driver when the servo state is "run" in mixed control mode.
<table>
<tr><th>P00-00</th><th>DI3 terminal logic selection（P01-22）</th><th>Control mode</th></tr>
<tr><td rowspan="2">3</td><td>invalid</td><td>Location mode</td></tr>
<tr><td>valid</td><td>Speed mode</td></tr>
<tr><td rowspan="2">4</td><td>invalid</td><td>Torque mode</td></tr>
<tr><td>valid</td><td>Location mode</td></tr>
<tr><td rowspan="2">5</td><td>invalid</td><td>Speed mode</td></tr>
<tr><td>valid</td><td>Torque mode</td></tr>
</table></td></tr>
<tr><td>P01-07</td><td>DI4 terminal function selection</td><td>11-Operation mode switching 1</td><td>set the current control mode of the driver when the servo state is "run" in mixed control mode.
<table>
<tr><th>P00-00</th><th>DI3 terminal logic selection（P01-22）</th><th>DI4 terminal logic selection（P01-23）</th><th>Control mode</th></tr>
<tr><td rowspan="3">6</td><td></td><td>Valid</td><td>Location mode</td></tr>
<tr><td>Valid</td><td>Invalid</td><td>Speed mode</td></tr>
<tr><td>Invalid</td><td>Invalid</td><td>Torque mode</td></tr>
</table></td></tr>
</table>

5.5 Absolute Value System Usage Instructions

5.5.1 Overview

The absolute value encoder not only detects the position of the motor within one rotation, but also counts the number of rotations of the motor. The single rotation resolution is 8388608 (23 bits)/131072 (17 bits), and it can store 16 bit multi rotation data. The use of absolute value encoders can be divided into absolute position linear mode and absolute position rotation mode, which can be used in position, speed, and torque control modes. When the driver is powered off, the encoder backs up the data through the battery, and after power on, the driver calculates the mechanical absolute position through the absolute position of the encoder, without the need for repeated mechanical origin reset operations.

User setting P00-03 (absolute position detection selection). When the battery is first connected, Al.045 (encoder battery fault) occurs, and an absolute encoder reset operation needs to be performed through F-004.

Note: When modifying C-002 (motor rotation direction definition) or performing absolute encoder reset (F-004), the absolute position of the encoder will undergo a sudden change, resulting in a change in the mechanical absolute position reference. Therefore, mechanical origin reset operation is required. When using the internal origin reset function of the drive, the mechanical absolute position and encoder absolute position deviation will be automatically calculated and stored in the drive EEPROM after the origin reset is completed.

5.5.2 Relevant function code settings

1) Absolute value system settings

Code	Name	Set range	unit	value	Effective Mode	Set mode	Relevant Mode
P00-03	Absolute position detection selection	0- Incremental Position Mode 1- Absolute position linear mode 2- Absolute Position Rotation Mode	-	0	power on again	Stop set	ALL

Select absolute position mode through P00-03.

Note: In absolute position mode, the system automatically detects whether the motor mode is an absolute value encoder motor. If not, Al.039 (absolute position mode product matching fault) will occur.

2) Encoder feedback data

The absolute value encoder provides feedback on the number of rotations and the position within one rotation,Incremental position mode no feedback number of rotations。

Code	Name	Set range	unit	value	Effective Mode	Set mode	Relevant Mode
P13-34	Encoder multi turn position	-	r	0	-	display	ALL
P13-32	Encoder single turn position		Encoder unit	0	-	display	ALL
P13-48	Encoder position low 32 bits		Encoder unit	0	-	display	ALL
P13-50	Encoder position high 32 bits		Encoder unit	0	-	display	ALL

The absolute value encoder rotation data P13-34 is an unsigned number with a range of 0-65535, assuming the encoder resolution Rev:
The range of position P13-32 within one circle of the absolute value encoder is 0~Rev.
The absolute position of the absolute value encoder P13-50 * 232+P13-48 is calculated based on the feedback data P13-34, P13-32, and Rev .

When P13-34<32768, P13-50* 232 + P13-48 = P13-34 * Rev + P13-32

When P13-34 ≥ 32768, P13-50 * 232+P13-48=(P13-34-65536) * Rev+P13-32

3) Absolute value position linear mode

Code	Name	Set range	unit	value	Effective	Set	Relevant

					Mode	mode	Mode
P05-56	Absolute position linear mode position offset (low 32 bits)	-2147483648~2147483647	unit	0	Effective immediately	Stop set	ALL
P05-58	Absolute position linear mode position offset (high 32 bits)	-2147483648~2147483647	unit	0	Effective immediately	Stop set	ALL
P05-36	Absolute position count value		unit	0		display	PST
P13-38	Mechanical absolute position (low 32 bits)		unit	0	-	display	ALL
P13-40	Mechanical absolute position (high 32 bits)		unit	0	-	display	ALL

In absolute value linear mode, the mechanical position can be recorded by absolute value encoder when power off. After the user performs the origin regression function, the driver will record the point as the mechanical origin ,and record the offset between original point of the encoder and mechanical original point.

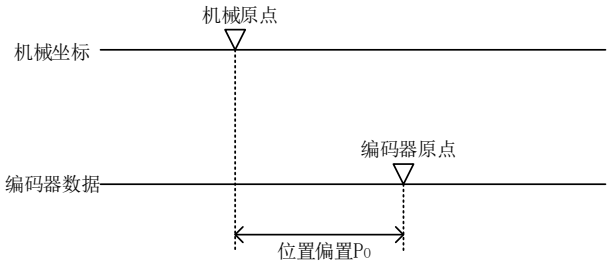

$P_M = P_E - P_O$

Symbol	说明

P_M	Mechanical absolute position	$P13-40\times2^{32}+P13-38$
P_E	Absolute position of encoder	$P13-50\times2^{32}+P13-48$
P_O	Linear position offset	$P05\text{-}58\times2^{32}+P05\text{-}56$

In absolute value linear mode, the multi turns data range of encoder is -32768~32767. If the number of forward turns is more than 32767 or the number of reverse turns is less than -32768, AL.044 (encoder multi turn counter overflow) fault will occur. This fault can be canceled by setting P0B-17.

Code	Name	Set range	unit	value	Effective Mode	Set mode	Relevant Mode
P0B-17	Encoder multi turn overflow fault prohibited	0- Allow faults 1- Shielding fault	-	0	Effective immediately	Stop set	ALL

4) Absolute value position rotation mode

The number of encoder pulses corresponding to one rotation can be set through P05-61/62 or P05-64/66, both of which can represent the number of encoder pulses corresponding to one rotation, with P05-64/66 having higher priority.

Assuming the encoder resolution R_E, the number of encoder pulses corresponding to one rotation R_M, when P05-64/66≠0, $R_M = P5-66*2^{32}+P5-64$, when P05-64/66=0, $R_M = R_E\times\frac{P5-61}{P5-62}$

Code	Name	Set range	unit	value	Effective Mode	Set mode	Relevant Mode
P05-61	Multi turn absolute position mode 2 mechanical gear ratio molecule	1~65535	-	1	Power on again	Stop set	ALL
P05-62	Multi turn absolute position	1~65535	-	1	Power on again	Stop set	ALL

	mode 2 mechanical gear ratio denominator						
P05-64	Multi turn absolute position mode 2 has a mechanical position upper limit value that is 32 bits lower	0~4294967295	--	0	Power on again	Stop set	ALL
P05-66	Multi turn absolute position mode 2 has a mechanical position upper limit value that is 32 bits higher	0~4294967295	-	0	Power on again	Stop set	ALL

The parameters related to location are defined in the following table

Code	Name	Set range	unit	value	Effective Mode	Set mode	Relevant Mode
P13-38	Mechanical absolute position (low 32 bits)		Encoder unit	0	-	display	ALL
P13-40	Mechanical absolute position (high 32 bits)		Encoder unit	0	-	display	ALL
P13-44	Rotating load single turn position (low 32 bits)		Encoder unit	0	-	display	ALL
P13-46	Rotating load single turn position (high 32 bits)		Encoder unit	0	-	display	ALL
P13-42	Rotating load single turn position		Command unit	0	-	display	ALL

- The relationship between the load single turn position command unit (P13-42) and the encoder unit (P13-44/46) is：

$$P13-42=(P13-46\times 2^{32}+P13-44)/\text{电子齿轮比}$$

Note that the electronic gear ratio here is the position loop electronic gear ratio (P05-02/P05-04), not the mechanical gear ratio.

- The relationship between the mechanical absolute position (P13-38/40) and the rotational load single turn position (P13-44/46) is:

$$P13-40\times 2^{32}+P13-38=\text{负载圈数}\times\text{负载一圈脉冲数}+P13-46\times 2^{32}+P13-44$$

- The relationship between the number of load cycles and the position of a single load cycle is shown in the following figure. For every forward rotation of the load, the number of load cycles is increased by 1.

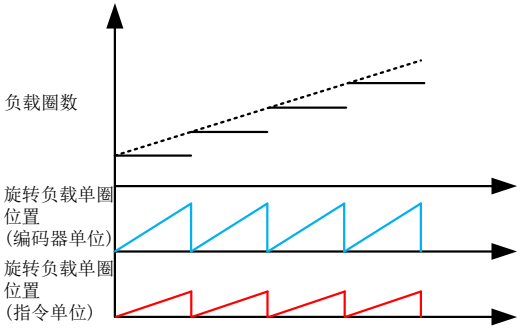

5) Absolute encoder reset operation

The reset operation of the encoder through F-004

Code	Name	Set range	unit	value	Effective Mode	Set mode	Relevant Mode
F-004	Absolute encoder reset operation	0- No operation 1- Absolute encoder alarm reset 2- Absolute encoder reset	-	0	Effective immediately	Stop set	ALL

5.6 Trial operation

5.6.1 Inspection and Precautions Before Trial Operation

To ensure safety and proper trial operation, please check and confirm the following items in advance.

- Status of servo motor

  Status of servo motor

  Check and confirm the following items, and if any problems are found, please handle them properly before trial operation.

  ① Are the settings, wiring, and connections correct.

  ② Are there any loose fasteners.

  ③ When it comes to servo motors with oil seals, whether the oil seal part is damaged and whether oil has been applied.

  ④ When using a servo motor with a holding brake, has the brake been released beforehand.

  ⑤Is the power supply voltage to the servo unit normal。

  ⑥Is there no warning or alarm on the drive status display interface.

  Installation

  ① Install the servo motor and servo unit according to the installation conditions.

  ② The servo motor may overturn during rotation, so please be sure to fix it on the machine.

  ③ Please make sure to keep the servo motor in an unloaded state.

5.7 Adjustment

Adjustment refers to optimizing responsiveness by adjusting the servo gain of the servo unit.

The servo gain is set through a combination of multiple parameters (speed loop gain, position loop gain, filter, inertia ratio, etc.), which will affect each other. Therefore, when setting, the balance between the set values of each parameter must be considered.

The factory setting for servo gain is a basic setting. Please use various adjustment functions based on the user's mechanical condition to further improve responsiveness.。

5.7.1 Safety precautions during adjustment

When making adjustments, please set the servo unit protection

function as shown in the following items under appropriate conditions.

(1) Set over travel

Please set the over travel. For detailed information, please refer to the relevant chapters.

(2) Setting of torque limit

The torque limiting function is to calculate the required torque for mechanical operation and limit the output torque to ensure it does not exceed that value. In the event of mechanical interference or collision, the impact can be reduced. If the torque is set below the required value for operation, overshoot or vibration may occur. Please refer to the relevant chapters for details.

(3) Set the alarm value for excessive position deviation

The alarm for excessive position deviation is an effective protection function when using servo units for position control.

When the motor action does not match the command, setting an appropriate position deviation alarm value can detect abnormal situations and stop the motor from running。

5.7.2 Basic Process of Adjustment

The figure below is a flowchart of the basic adjustment steps. Please make appropriate adjustments based on the status and operating conditions of the machine being used.

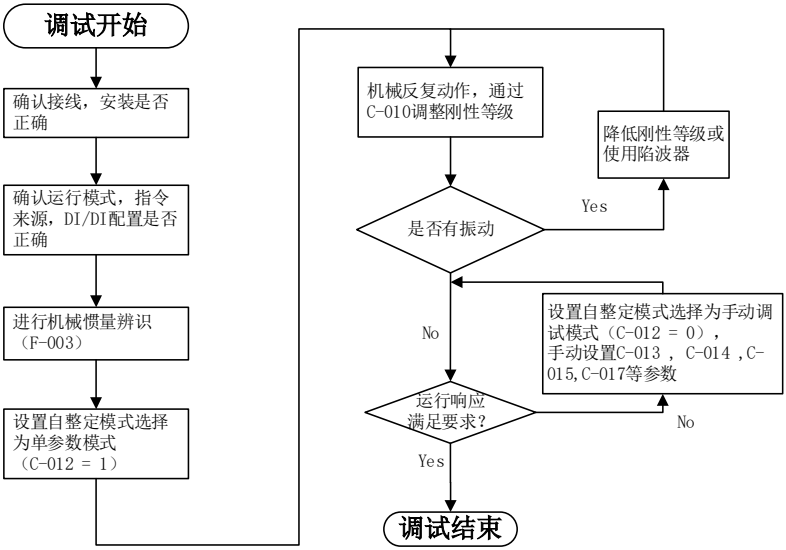

Figure 5-8 debug relevant methods

Firstly, check the wiring and installation correctly, and after setting the relevant basic functional parameters, adjust the inertia identification, single parameter adjustment, and vibration suppression performance.

Accurately setting the inertia ratio is the foundation of debugging. After obtaining the correct load inertia ratio through inertia identification, first set single parameter adjustment (see relevant chapters for details). If the effect is not good, then manually adjust the gain (see relevant chapters for details). Mechanical resonance can be suppressed by setting appropriate notch filters (see relevant chapters for details).

5.7.3 single parameter adjustment

Single parameter adjustment refers to adjusting the rigidity level of the servo through a single parameter (C-010), and the servo driver will automatically generate a set of matching gain parameters to meet the requirements of stability, accuracy, and speed.

Before starting single parameter adjustment, it is necessary to identify the load inertia or obtain relevant load parameters through manual calculation.

The range of values for the rigidity level (C-010) is between 0-31. Level 0 corresponds to the weakest rigidity and the smallest gain; Level 31 corresponds to the strongest rigidity and maximum gain. Based on different types of loads, the following experience can be used as a reference:5-8 levels, some complex transmission machinery.Level 9-14, systems with low rigidity such as belt drive and cantilever structure.Level 15-20, systems with high rigidity such as ball screws, gear racks, and direct drive systems

relevant function code as below:：

Code	Name	Set range	unit	value	Effective Mode	Set mode	Relevant Mode
C-012	Self tuning mode selection	0- Manual adjustment of gain mode 1- Single parameter adjustment mode 2- Single parameter adjustment mode (emphasizing position response)	-	1	Effective immediately	Run set	ALL
C-010	Rigid grade selection	0~31	-	12	Effective immediately	Run set	ALL

5.7.4 Manual Adjustment Function

When single parameter adjustment still cannot meet the operational response requirements, the self-tuning mode (C-012) can be set to 0 to obtain better response through manual adjustment.

When manually adjusting the servo gain, please adjust each servo gain one by one based on understanding the composition and characteristics of the servo unit. In most cases, if a parameter undergoes significant changes, other parameters must be adjusted again. In order to confirm the response characteristics, it is necessary to prepare for observing the output waveform of the analog monitor using measuring instruments.

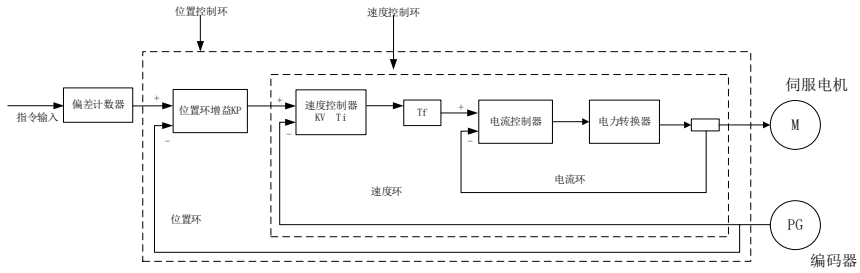

Figure 5.10 Manually adjust the control diagram

The servo unit consists of three feedback loops (position loop, velocity loop, current loop), and the more inner the loop, the more it needs to improve its responsiveness. If this principle is not followed, it will result in decreased responsiveness or vibration.

Due to the current loop ensuring sufficient responsiveness, users do not need to make adjustments.

Code	Data name	Debug principal
C-015	Position loop gain	The default value is 40.0Hz Adjust according to the positioning time The larger the value, the shorter the positioning time, but if it is too high, it can cause vibration
C-013	Speed loop gain	The default value is 25.0Hz Within the range where the mechanical system does not vibrate, the larger the set value, the more stable and responsive the servo system is When abnormal noise or vibration occurs, reduce it
C-014	Speed loop integral time constant	The default value is 31.83ms When the value is adjusted, the positioning time becomes faster, and if it is too small, vibration will occur When the value is large, it may cause the pulse deviation , not able reduced to zero
C-017	Torque command filtering time constant	The default value is 790us Try changing this value when vibration occurs The smaller the value, the more responsive control can be achieved
P03-14	Speed feed forward	The default value is 0.0% Increasing the feed forward gain can reduce real-time

	gain	position deviation. When the input command is uneven, increasing the feed forward filtering time constant P03.13 can improve it When vibration occurs, try reducing this value

The general method for manual adjustment is as follows:

5.7.5 Feed forward gain

Speed feed forward can be applied to position control mode and fully closed-loop function. The use of speed feed forward function can improve speed command response and reduce position deviation at fixed speeds。

Operation steps for speed feed forward function：

a) Set the source of speed feed forward signal

Set P3-12 (speed feed forward control selection) to a non-zero value, the speed feed forward function will take effect, and the corresponding signal source will be selected；

Code	Name	Set range	unit	value	Effective Mode	Set mode	Relevant Mode
P03-12	Selection of position feed forward control	0- No speed feed forward 1. Internal speed feed forward 2-AI1 as speed feed forward input 3-AI2 as speed feed forward input	-	1	Effective immediately	Stop set	P

b) Set speed feed forward parameters：

Including speed feed forward gain (P3-14) and speed feed forward filtering time constant (P3-13).

Code	Name	Adjust description
P3-13	speed feed forward filtering time constant	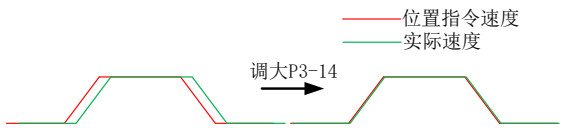

P3-14	speed feed forward gain	Parameter function: Increasing P3-14 can improve response, but may result in speed overshoot during acceleration and deceleration; Increasing P3-13 can suppress noise caused by uneven position commands, while reducing P3-13 can reduce speed overshoot during acceleration and deceleration.

5.7.6 Mechanical vibration suppression

Mechanical systems have a certain resonance frequency. When the servo gain is increased, resonance may occur near the mechanical resonance frequency, causing the gain to be unable to continue to increase. Suppressing mechanical resonance can be achieved through the following two ways:

1) Torque command filter (C-017)

By setting a filtering time constant, the torque is attenuated in the high-frequency range above the cutoff frequency, thereby achieving the goal of suppressing mechanical resonance

Code	Name	Set range	unit	value	Effective Mode	Set mode	Relevant Mode
C-017	Torque command filtering time constant	0~3000	10us	79	Effective immediately	Run set	PST

2) Notch filter

The torque command filter is a digital band stop filter, with four sets of series notch filters available for selection. The first and second notch filters are manual notch filters, and the parameters are manually set by the user. The 3rd and 4th notch filters are adaptive filters, and their mode is controlled by P0E.00. You can choose whether to enable the 3rd (P0E-00=1) or enable both the 3rd and 4th (P0E-00=2) filters at the same time. When the adaptive filter mode is enabled, the filter parameters are set by the driver. If the (P0E-00=0) adaptive filter is not enabled, the filter parameters can be manually set.

Relevant code：

Code	Name	Set range	unit	value	Effective Mode	Set mode	Relevant Mode
P0E-00	Adaptive notch filter mode selection	0- No action 1- Enable 1 adaptive filter (Group 3) to automatically update filter parameters 2- Enable 2 adaptive filters (groups 3 and 4) to automatically update filter parameters 3- Only detect resonance frequency, do not update filter parameters 4- Reset adaptive filter parameters	-	0	Effective immediately	Run set	PS
P0E-01	Frequency of notch filter 1	50~4000	Hz	4000	Effective immediately	Run set	PS
P0E-02	Width level of notch filter 1	0~20	-	2	Effective immediately	Run set	PS
P0E-03	Attenuation level of notch filter 1	0~99	-	0	Effective immediately	Run set	PS
P0E-04	Frequency of notch filter 2	50~4000	Hz	4000	Effective immediately	Run set	PS
P0E-05	Width level of notch filter 2	0~20	-	2	Effective immediately	Run set	PS
P0E-06	Attenuation level of notch filter 2	0~99	-	0	Effective immediately	Run set	PS
P0E-07	Adaptive notch filter 1 frequency	50~4000	Hz	4000	Effective immediately	Run set	PS
P0E-	Adaptive	0~20	-	2	Effective	Run	PS

08	notch filter 1 width level				immediately	set	
P0E-09	Adaptive notch filter 1 attenuation level	0~99	-	0	Effective immediately	Run set	PS
P0E-10	Adaptive notch filter 2 frequency	50~4000	Hz	4000	Effective immediately	Run set	PS
P0E-11	Adaptive notch filter 2 width level	0~20	-	2	Effective immediately	Run set	PS
P0E-12	Adaptive notch filter 2 attenuation level	0~99	-	0	Effective immediately	Run set	PS
P0E-13	Identification results of resonance frequency	-	Hz	-	-	display	PS

5.8 Virtual VDI/VDO

5.8.1 Virtual digital signal input terminal（VDI）

set the DI function corresponding to VDI1 (virtual input terminal), please follow the steps below：

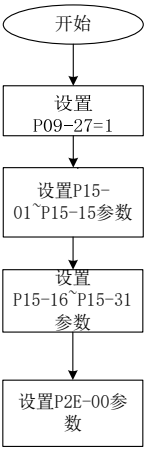

Figure 5.12 Virtual digital signal input terminal setting process

☆relevant code

The first time power on, the VDI terminal logic is determined by P09-26 (the

Code	Name	Set range	unit	value	Effective Mode	Set mode	Relevant Mode
P09-25	Virtual VDI enable	0- Shut VDI 1- Open VDI	-	0	Effective immediately	Stop set	Ordinary user
P09-26	VDI default value after power on	0~65535	-	0	Stop restart	Set anytime	Ordinary user
P15-01~15	VDI terminal function selection	0~39 For details, please refer to the User Parameters section	-	0	Effective immediately	Set anytime	Ordinary user
P15-16~31	VDI terminal logic selection	0- VDI terminal write 1 is valid 1- VDI terminal write 0 is valid	-	0	Effective immediately	Stop set	Ordinary user
P2E-00	VDI virtual voltage level	0~65535	-	0	Effective immediately	Write anytime	Ordinary user

default virtual level value of VDI after power on). Afterwards, the VDI terminal logic is determined by P2E-00 (VDI virtual level). The bit (n)=1 of P2E-00 indicates that the VDI (n+1) terminal logic is "1", and the bit (n)=0 indicates that the VDI (n+1) terminal logic is "0"。

5.8.2 Virtual Digital Signal Output Terminal (VDO)

To set the DO function corresponding to VDO1 (virtual input terminal), please follow the steps below to use VDO：

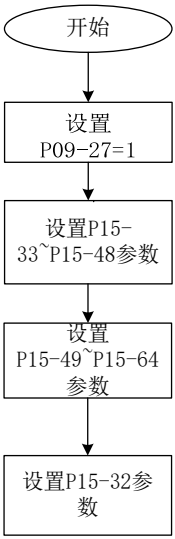

Figure 5.13 Virtual digital signal output terminal setting process

☆relevant code

The bit (n)=1 of P15-32 indicates that the logic of the VDO (n+1) terminal is "1", and the

Code	Name	Set range	unit	value	Effective Mode	Set mode	Relevant Mode
P09-27	Virtual VDO enable	0- Shut VDO 1- Open VDO	-	0	Effective immediately	Stop set	Ordinary user
P09-28	VDO default value after power on	0~65535	-	0	Stop restart	Set anytime	Ordinary user
P15-33~48	VDO terminal function selection	0~39 For details, please refer to the User Parameters section	-	0	Effective immediately	Set anytime	Ordinary user
P15-49~64	VDO terminal logic selection	0- VDO terminal write 1 is valid 1- VD) terminal write 0 is valid	-	0	Effective immediately	Stop set	Ordinary user
P15-32	VDO virtual level	0~65535	-	0	Effective immediately	Set anytime	Ordinary user

bit (n)=0 indicates that the logic of the VDO (n+1) terminal is "0".

5.9 Instructions for using multi-stage position mode

The servo drive has a multi-stage position operation function, and the R8 servo drive stores 16 segments of position instructions internally. The displacement, maximum operating speed, and acceleration/deceleration time of each segment can be set separately. The waiting time and connection method between each section can also be selected according to actual needs. The setting process is as follows:

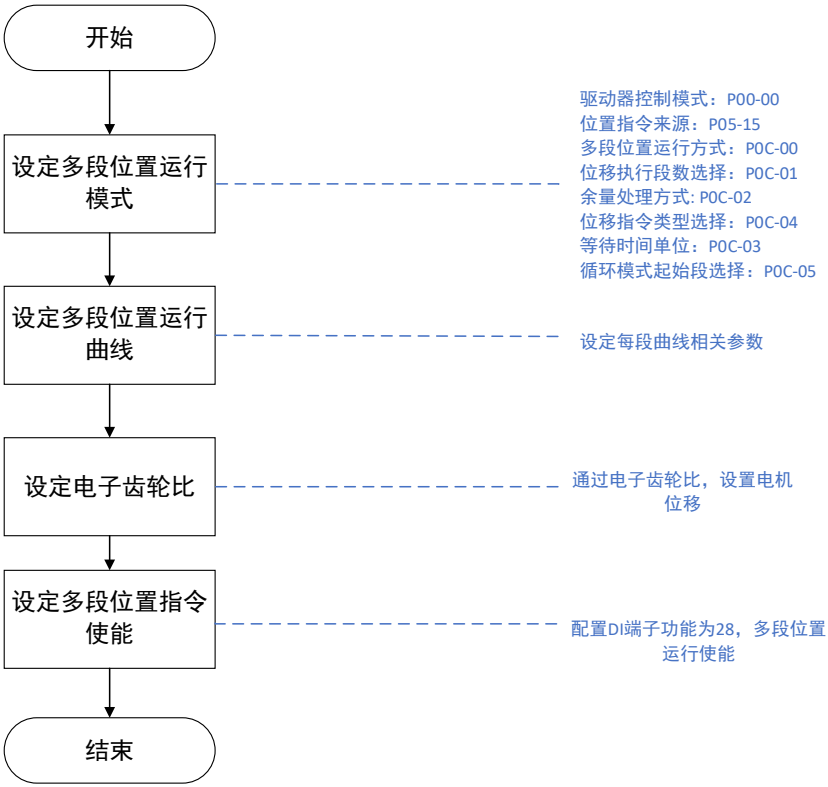

Figure 5.14 Multi segment position mode setting process

Code	Name	Set range	unit	value	Effective Mode	Set mode	Relevant Mode

P00-00	Mode selection	0-position mode 1-Speed mode 2-Torque mode 3-Position and velocity mixed mode 4-position and torque hybrid mode 5-speed and torque hybrid mode 6-Mixed mode of position, speed, and torque 7- Reserved 8-EtherCAT bus mode	-	0	Effective immediately	Stop set	ALL
P01-04~07	DI terminal function selection	0~40	-	0	Effective immediately	Stop set	ALL
P05-15	Location instruction source	0-Low speed pulse input 1. High speed pulse input 2-Division output OA, OB signals 3- Constant at 0 4- Internal multi-stage pulse input	-	0	Effective immediately	Stop set	ALL
P0C-00	Multi position operation mode	0-single circle operation stop 1-Loop operation 2-DI switching operation 3- Sequential operation (without delay between segments)	--	1	Effective immediately	Stop set	Ordinary user
P0C-01	Selection of displacement execution segments	1~16	--	2	Effective immediately	Stop set	Ordinary user
P0C-02	Remaining processing method	0- Include in the next segment 1. Enter the next segment and ignore the remaining amount in this segment	--	0	Effective immediately	Stop set	Ordinary user
P0C-03	Waiting time unit	0-(ms) 1-(s)	--	1	Effective immediately	Stop set	Ordinary user
P0C-04	Selection of displacement command type	0-Relative displacement 1- Absolute displacement	--	0	Effective immediately	Stop set	Ordinary user
P0C-05	Selection of starting segment for loop mode	0~16	--	0	Effective immediately	Stop set	Ordinary user

P0C-10 ~ P0C-40	The displacement of the (1-16) segment	-1073741825~1073741824	ins	0	Effective immediately	Stop set	Ordinary user
P0C-42 ~ P0C-57	Moving speed of section(1-16)	1~6000	rpm	200	Effective immediately	Stop set	Ordinary user
P0C-58 ~ P0C-73	The acceleration and deceleration time of the (1-16) segment movement	0~65535	Ms or s	1	Effective immediately	Stop set	Ordinary user
P0C-74 ~ P0C-89	Waiting time after the completion of the (1-16) segment shift	0~10000	Ms or s	10	Effective immediately	Stop set	Ordinary user

5.10 Instructions for using multi-stage speed mode

The servo drive has the function of operating at multiple speeds. The R8 servo drive stores 16 speed commands internally, and the maximum running time and running time of each segment can be set separately. The setting process is as follows:

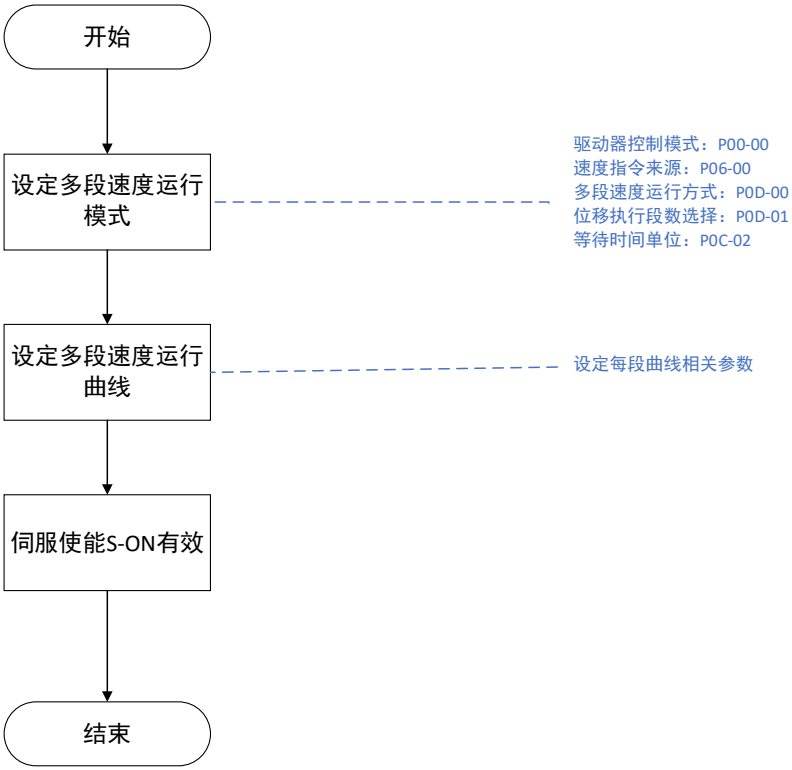

Figure 5.15 Multi speed mode setting process

☆relevant code

Code	Name	Set range	unit	value	Effective Mode	Set mode	Relevant Mode
P00-00	Mode selection	0-position mode 1-Speed mode 2-Torque mode 3-Position and velocity mixed mode 4-position and torque hybrid mode	-	0	Effective immediately	Stop set	ALL

		5-speed and torque hybrid mode 6-Mixed mode of position, speed, and torque 7- Reserved 8-EtherCAT bus mode					
P06-00	Source of speed command	0-Speed command A 1-Speed command B 2-Speed command A+Speed command B 3-Switch between speed command A and speed command B	--	0	Effective immediately	Stop set	Ordinary user
P0D-00	Multi segment speed command operation mode	0-Single run, shutdown upon completion of run 1-Loop operation 2. Switching operation interruption through external DI signal	--	1	Effective immediately	Stop set	Ordinary user
P0D-01	Selection of End Segment amount for Speed Command	1~16	--	16	Effective immediately	Stop set	Ordinary user
P0D-02	Selection of Running Time Unit	0-0.1s 1-0.1min	--	0	Effective immediately	Stop set	Ordinary user
P0D-05 ~	Acceleration time 1-4	0~65535	--		Effective immediately	Stop set	Ordinary user

P0D-08							
P0D-10 ~ P0D-3	Deceleration time 1-4	0~65535	--		Effective immediately	Stop set	Ordinary user
P0D-20 ~ P0D-35	Instructions in paragraph i (1-16)	-6000~6000	--		Effective immediately	Stop set	Ordinary user
P0D-40~ P0D-55	The running time of the i (1-16) segment	0~65535	0.1s(min)	50	Effective immediately	Stop set	Ordinary user
P0D-60 ~ P0D-75	Acceleration and deceleration time of segment i (1-16)	0- acceleration and deceleration time 1. Acceleration and deceleration time 1 2- Acceleration and deceleration time 2 3- Acceleration and deceleration time 3 4- Acceleration and deceleration time 4	1	0	Effective immediately	Stop set	Ordinary user

5.11 Driver matching instructions for the other brand motors

5.11.1 Parameter settings before combination use

When using R8 servo driver to match motors from other manufacturers, the

following steps should be followed to set it up：

1.Customize motor parameter settings and enter developer mode

First, set the P00-01 parameter to 65535 and P00-14 parameter to 3605 before restarting the servo

Code	Name	Set range	unit	value	Effective Mode	Set mode	Relevant Mode
P00-01	Motor mode	0~65535	-	0	Stop restart	Stop set	Ordinary user

2.Modify the following relevant parameters according to the specifications of the motor, and save the selected parameters：

Code	Name	Set range	unit	value	Effective Mode	Set mode	Relevant Mode
P10-04	Single cycle pulse count of motor	1~1073741824	p	1	Stop restart	Stop set	Factory mode
P10-06	Rated voltage	0-220V 1-380V	--	0	Stop restart	Stop set	Factory mode
P10-07	Rated power	0~65535	10W	75	Stop restart	Stop set	Factory mode
P10-08	Rated current	0~65535	0.01A	470	Stop restart	Stop set	Factory mode
P10-09	Rated torque	0~65535	0.01Nm	239	Stop restart	Stop set	Factory mode
P10-10	Rated speed	0~65535	rpm	3000	Stop restart	Stop set	Factory mode
P10-11	Maximum torque	0~65535	0.01Nm	716	Stop restart	Stop set	Factory mode
P10-12	Maximum speed	0~65535	rpm	6000	Stop restart	Stop set	Factory mode
P10-16	Moment of inertia	0~65535	$kg.mm^2$	130	Stop restart	Stop set	Factory mode

P10-17	Polar logarithms	0~65535	--	4	Stop restart	Stop set	Factory mode
P10-18	Phase resistance	0~65535	mΩ	500	Stop restart	Stop set	Factory mode
P10-19	Q-axis inductance	0~65535	mH	327	Stop restart	Stop set	Factory mode
P10-20	D-axis inductance	0~65535	mH	387	Stop restart	Stop set	Factory mode
P10-21	Coefficient of back EMF	0~65535	0.01mV/rpm	3330	Stop restart	Stop set	Factory mode
P10-22	Z signal corresponds to electrical angle	0~3600	0.1°	1800	Stop restart	Stop set	Factory mode

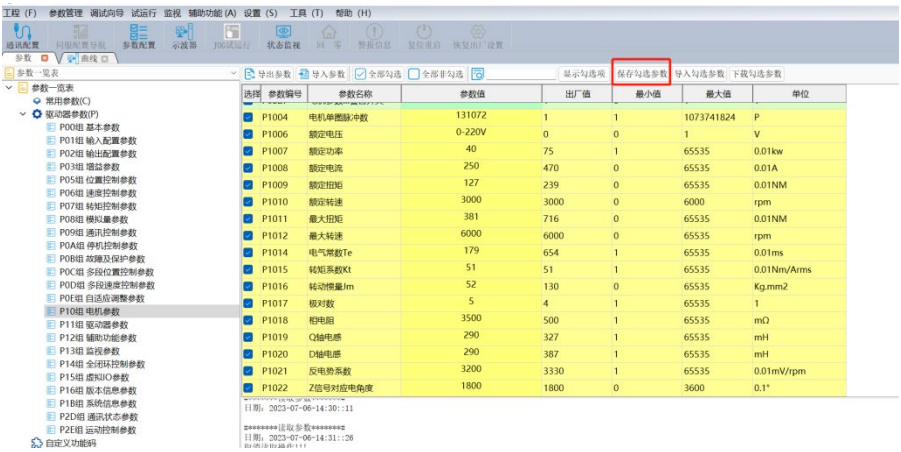

Figure 5.16 After selecting parameters, save and check the selected parameters

3.Import parameter files using the upper computer

Using the SamKoon servo software, write the motor parameters from step two into the servo, restart the servo, and re read the servo parameters to confirm successful parameter writing。

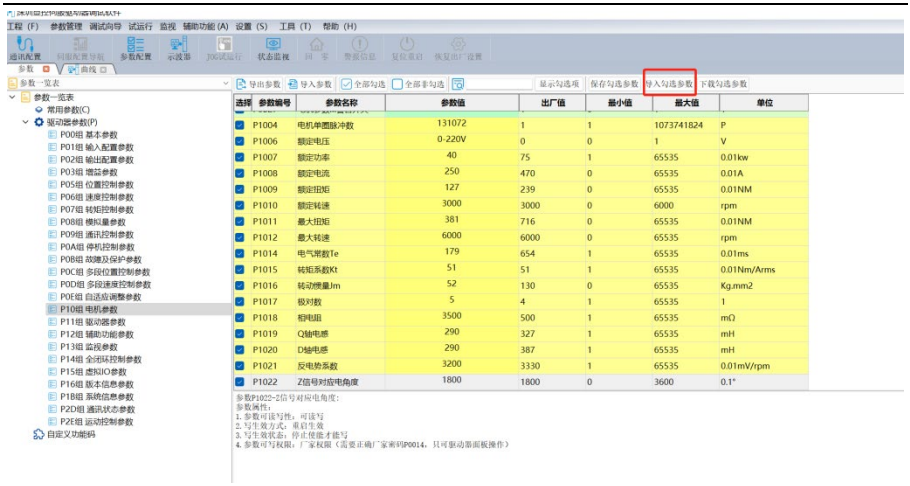

Figure 5.17 After saving the parameters, download and select the parameters

5.11.2 Motor encoder phase reset operation

1. Set P00-14 to 3605 and P20-00 to 3 to lock the motor shaft

Code	Name	Set range	unit	value	Effective Mode	Set mode	Relevant Mode
P00-14	Factory password	0~65535	--	0	Effective immediately	Set anytime	Ordinary user
P20-00	Motor mode set	3-Motor shaft lock		0	Effective immediately	Set anytime	Ordinary user

2.After locking the motor shaft, check the P20-06 lock shaft voltage percentage and turn the motor shaft. If it can be turned, increase the value of P20.06 and lock the motor shaft.

Code	Name	Set range	unit	value	Effective Mode	Set mode	Relevant Mode
P20-06	Lock shaft current intensity	0~100	--	30	Effective immediately	Set anytime	Ordinary user

3. Read the value of P13-31, calculate the difference between P13-31 and P10-22, and write the difference into P10-22.

Code	Name	Set range	unit	value	Effective Mode	Set mode	Relevant Mode
P13-31	Electrical angle	0~3600	0.1°	0	Read only	read	Ordinary user
P10-22	Z signal corresponds to electrical angle	0~3600	0.1°	1800	Stop restart	Stop set	Factory mode

4.Set P20-00 to 0 to unlock the shaft and enter JOG mode to test if it can operate normally.

Code	Name	Set range	unit	value	Effective Mode	Set mode	Relevant Mode
P20-00	Motor mode set	3-Motor shaft locking		0	Effective immediately	Stop set	Ordinary user

5.12 Brake setting

Brake is a mechanism that prevents the servo motor shaft from moving when the servo drive is not in operation, keeping the motor locked in position and prevent moving due to their own weight or external forces.

5.12.1 Brake wiring

Servo motors are commonly used as electromagnetic brake systems. Generally, the electromagnetic brake power supply have no polarity, and users need to prepare a 24V power supply. The standard connection example of brake signal BK and the brake power supply wiring is shown in the following figure：

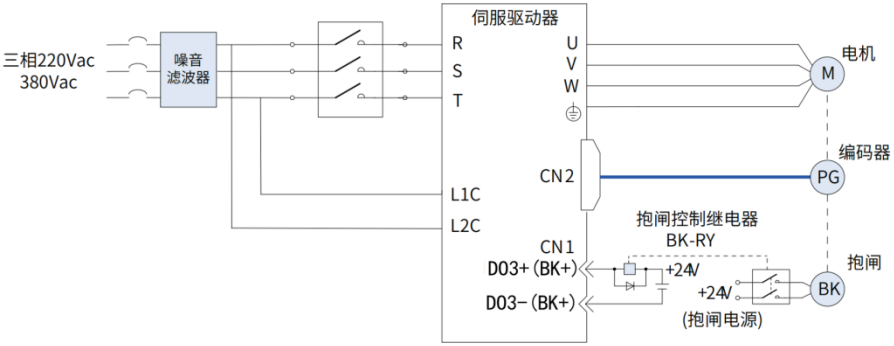

Figure 5.18 brake wiring diagram

Taking OMURBKK's MY2N-J as an example, the actual wiring of the servo is shown in the diagram：

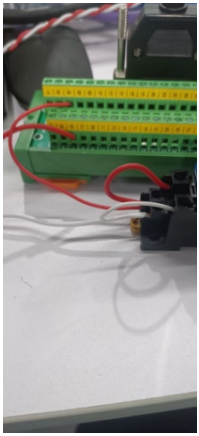

Figure 5.19 Physical Wiring Diagram of Brake

The brake signal line+24V enters from DO3+ ,DO3- connected to relay pin 14. Relay pin 13 is connected to -24V ,so that complete the control circuit.Brake cable “+” terminal end connect 8,” -” terminal end connect 5. During normal use, 14 and 12 short circuited, 13 and 9 short circuited, so that provide power for the brake .

Precautions for brake wiring：

The length of the motor brake cable needs to fully consider the voltage drop caused by cable resistance, and the brake operation needs to ensure that the input voltage is at least 21.6V.

It is best not to share the power supply with other electrical appliances to prevent voltage or current drops caused by the operation of other electrical appliances, which may ultimately lead to brake misoperation.

Recommend using cables of 0.5mm ^{2} or larger.

5.12.2 Brake software settings

For servo motors with brakes, one DO terminal of the servo driver must be configured as the brake output, and the effective logic of the DO terminal must be determined.

Code	Name	Set range	unit	value	Effective Mode	Set mode	Relevant Mode
P02-02	DO3 terminal function selection	10-brake	--	1	Effective immediately	Set anytime	Ordinary user

5.12.3 brake problem

The common problems with the brake of servo motors during the running or stop process include the following:

(1)**servo power on process**

When the power on,the servo motor will first be powered on and then the brake will be opened. Generally, there will be a phenomenon of the Z-axis load falling down. If the servo is in position mode, the Z-axis will return to its initial position before falling. If the servo operation mode is not in position mode, the Z-axis load will remain in the stop position, which is a normal phenomenon.

To reduce the drop distance, the rigidity level P03-01 can be appropriately increased or the PE-60 torque gravity compensation value can be set after confirming the Z-axis weight.

Code	Name	Set range	unit	value	Effective Mode	Set mode	Relevant Mode
P03-01	Rigidity level	0~31	--	12	Effective immediately	Set anytime	Ordinary user
P0E-60	gravity compensation value	-1000~1000	‰	0	Effective immediately	Set anytime	Ordinary user

(2)**Servo power-off process**

When the servo drive is powered off normally and there is no alarm, the servo will continue to enable for a period of time, waiting for the brake to close before disconnecting the enable. Due to the tens of milliseconds required for the intermediate relay action, the Z-axis load may drop a certain distance downwards influence by high-speed operation or static related parameter settings. To reduce the distance of falling or avoid falling, optimization can be achieved by setting P00-15 = 1, increasing the rigidity level P03-01 appropriately, increasing PA-11, and decreasing PA-12.

Code	Name	Set range	unit	value	Effective Mode	Set mode	Relevant Mode
P00-15	Fast power outage, discharge failure	0-Enable power-off and fast power outage function 1-disable Power-off and fast power outage function		0	Effective immediately	Set anytime	Ordinary user
P03-01	Rigid level	0~31	--	12	Effective immediately	Set anytime	Ordinary user
P0A-11	Brake safety speed	0~3000	rpm	30	Effective immediately	Set anytime	Ordinary user
P0A-12	The longest waiting time for the brake to close after the servo is power off	1~1000	ms	500	Effective immediately	Set anytime	Ordinary user

（3）**Fault shutdown process**

If one type of fault occurs during the operation of the servo, it is possible that the high Z-axis load speed may cause the brake to not close in time, resulting in accidents where the load collides with the equipment. To avoid collisions, optimization can be achieved by increasing PA-11 and decreasing PA-12 parameters.

Code	Name	Set range	unit	value	Effective Mode	Set mode	Relevant Mode
P0A-11	Brake safety speed	0~3000	rpm	30	Effective immediately	Set anytime	Ordinary user
P0A-12	The longest waiting time for the brake to close after the servo is turned off	1~1000	ms	500	Effective immediately	Set anytime	Ordinary user

If the second type of fault occurs during the operation of the servo，In addition to modifying the parameters of PA-11 and PA-12, optimization can also be achieved by setting parameter PA-02 = 2 and P00-15 = 1, and selecting zero speed shutdown.

（4）Enable first and then immediately disable Z-axis drop (or disable due to servo failure after enabling)

When the motor in enabled status, the speed higher than the PA-11 speed threshold. If disable suddenly at this time, due to the high motor speed, the brake cannot be closed, which may also cause the Z-axis load to drop. At this time, the problem can be solved by increasing the value of PA-11 or decreasing the value of PA-12, but it should be noted that the set value should be within a reasonable range, otherwise it will reduce the service life of the motor brake.

Code	Name	Set range	unit	value	Effective Mode	Set mode	Relevant Mode
P0A-11	Brake safety speed	0~3000	rpm	30	Effective immediately	Set anytime	Ordinary user
P0A-12	The longest waiting time for the brake to close after the servo is turned off	1~1000	ms	500	Effective immediately	Set anytime	Ordinary user

（5）After power on, the servo was not enabled but the brake was opened

Firstly, check the servo parameter P13-30 and confirm the output status of the servo brake IO point; Then check whether the IO wiring DO+/DO- of the servo brake control signal is reversed. Because of the servo protection circuit in the DO output, reverse wiring can cause the brake control signal to misguide and lead to the problem of the brake opened but the servo is not enabled.

Code	Name	Set range	unit	value	Effective Mode	Set mode	Relevant Mode
P13-30	Monitor output signal DO	0~65535	--	0	Read	read	Ordinary user

（6）The power on servo enable but brake cannot be opened

Firstly, check the servo parameter P13-30 and confirm the output status of the servo brake IO point; Check if the wiring of the brake cable is normal, if the servo power supply is stable and greater than 21.6V. After confirming that there are no errors, check whether

the DO function is set to the brake function and if the brake logic is set correctly.

Code	Name	Set range	unit	value	Effective Mode	Set mode	Relevant Mode
P13-30	Output signal monitoring DO	0~65535	--	0	read	read	Ordinary user
P02-02	DO3 terminal function selection	10-brake	--	1	Effective immediately	Set anytime	Ordinary user

5.12.4 Troubleshooting of Brake Issues

1.Open the power on brake directly：

Pay attention to checking if the DO wiring is reversed. Reverse wiring can affect the servo IO logic and cause false triggering of the brake signal. If the enable signal is not given but the brake is in the open state when powered on, it is highly likely that the DO wiring is reversed.

2.The brake cannot be opened:

Check if the wiring of the brake cable is normal, if the servo power supply is stable and greater than 21.6V. After confirming that there are no errors, check if the DO function is set to the brake function and if the brake logic is set correctly.

5.13 Origin reset function

Origin: refers to the mechanical origin, which can represent the position of the origin switch or motor Z signal.

The origin reset function refers to the position control mode, when the servo enable is ON, triggering the origin reset function, the servo motor will actively search for the zero point and complete the positioning function.

During the origin reset operation, other position commands (including the reset enable signal triggered again) are blocked. After the origin reset operation is completed, the servo drive can respond to other position commands.

The origin reset function includes two modes: origin reset and electrical zeroing.

Zero return at origin: After receiving the trigger signal for zero return at origin, the servo driver actively locates the relative position between the motor shaft and the mechanical origin based on the preset mechanical origin. First, it searches for the origin, and then moves the offset based on the origin to reach the zero position. Returning to

zero at the origin is usually applied in the first attempt to find the zero point.

Electrical zeroing: After determining the absolute position of the zero point through the zero point zeroing operation, move a relative displacement from the current position as the starting point.

After the completion of the origin reset (including origin reset and electrical reset), the current absolute position of the motor (P13-36) is consistent with the mechanical origin offset (P05-48). After the origin return is completed, the servo driver outputs either the origin return completion signal or the electrical zeroing return completion signal. The origin return and electrical zeroing return completion signals are independent of the servo mode and servo operating status.

To use the origin reset function, a mechanical limit switch needs to be set in advance. If a limit signal is used for zeroing and a mechanical offset is used, please set the offset within the travel range to ensure that the origin reset process will not damage the machinery at high speed.

During the process of returning to the origin, if a limit switch is encountered, the servo drive will generate Al.114 (forward over travel warning) and Al.115 (reverse over travel warning). If P05-46=0 or 1, the servo motor will stop, and the stop mode will be determined by P0A-03 (over travel stop mode).

Table 5.1 Summary of Zero Return Methods

Zero return enable mode (P05-40)	Zeroing type	Trigger method	Zeroing method
1-DI input enables zero return to origin	Origin rest	Servo enable+DI (32) trigger	Determined by P5-41
2-DI input enables electrical zeroing	Electrical zeroing	Servo enable+DI (32) trigger	Directly find the electrical zero point
3- Perform origin regression after power on	Origin rest	Servo Enable	Determined by P5-41
4. Immediately return the origin to zero	Origin rest	Servo Enable	Determined by P5-41
5- Immediately perform electrical zeroing	Electrical zeroing	Servo Enable	Directly find the electrical zero point
6- Using the current position as the origin	Origin rest	At any time	-

5.13.1 Origin Return to Zero (Motion Return to Zero)

Using the following zeroing method as an example, explain how the origin returns to zero:

05-46=0 forward return to zero, deceleration point is the origin switch

05-46=1 reverse return to zero, deceleration point is the origin switch

05-46=2 forward return to zero, deceleration point is Z signal

05-46=3 reverse return to zero, deceleration point is Z signal

05-46=4 forward return to zero, deceleration point is the origin switch signal, origin is the Z signal

05-46=5 reverse return to zero, deceleration point is the origin switch signal, origin is the Z signal

05-46=6 forward return to zero, deceleration point and origin are forward limit switches

05-46=7 reverse return to zero, deceleration point and origin are reverse limit switches

05-46=8 forward return to zero, deceleration point is forward limit switch, origin is Z signal

05-46=9 reverse return to zero, deceleration point is reverse limit switch, origin is Z signal

Below are the motion trajectories of each zeroing mode. In each figure, "H" represents the high-speed search of the origin of P05-42, and "L" represents the low-speed search of the origin of P05-43.

When there is a regression method for finding the origin switch, power on, when the motor is not in the origin switch position, the servo will search for the rising edge of the origin signal at high speed. After encountering the rising edge, it will start to find the falling/rising edge at low speed (different rules have different low-speed edges). The entire zeroing method is shown in the table below.。

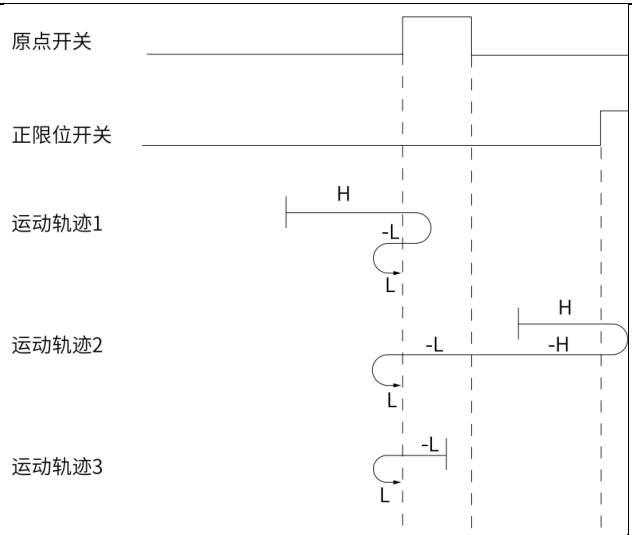

Forward return to zero, deceleration point and origin switch (P05-41=0)

■Movement trajectory 1: When the motor starts to move, the origin switch (deceleration point) signal is invalid, and the forward over travel switch is not triggered throughout the entire process.

■ Motion trajectory 2: When the motor starts to move, the origin switch (deceleration point) signal is invalid, and the forward over travel switch is triggered during the process.

■ Movement trajectory 3: When the motor starts moving, the origin switch (deceleration point) signal is valid, and the forward over travel switch is not triggered throughout the entire process.

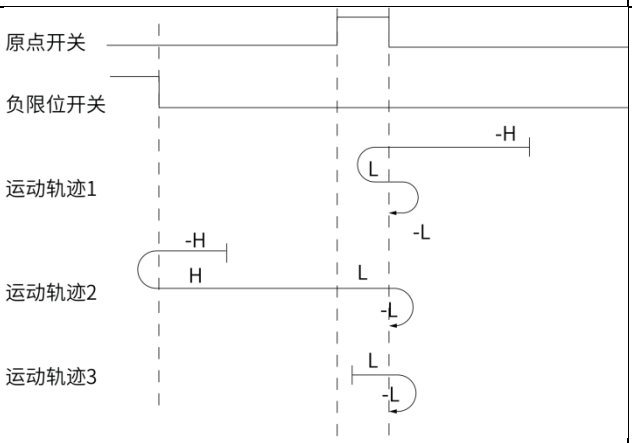

Reverse return to zero, with the deceleration point and origin as the origin switch (P05-41=1)

Movement trajectory 1,2and 3

When the motor starts moving, the signal from the origin switch (deceleration point) is invalid, and the reverse over travel switch is not triggered throughout the entire process.

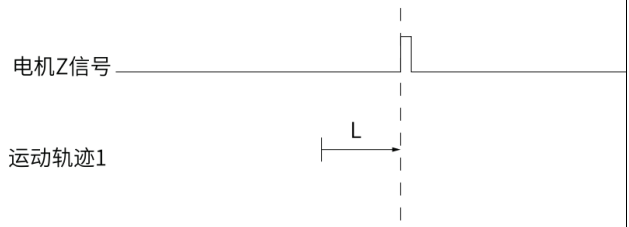 Forward return to zero, deceleration point and origin are motor Z signals (P05-41=2)	■ Movement trajectory 1: The Z signal is invalid when the motor starts moving, and the forward over travel switch is not triggered throughout the entire process.
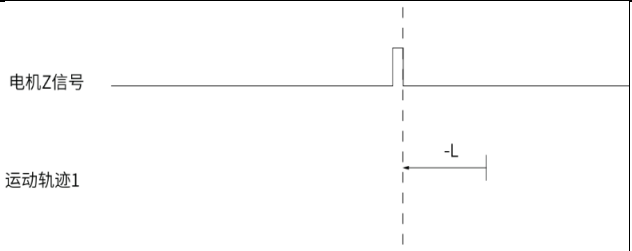 Reverse return to zero, deceleration point and origin are motor Z signals (P05-41=3)	■ Movement trajectory 1: The Z signal is invalid when the motor starts moving, and the reverse over travel switch is not triggered throughout the entire process.
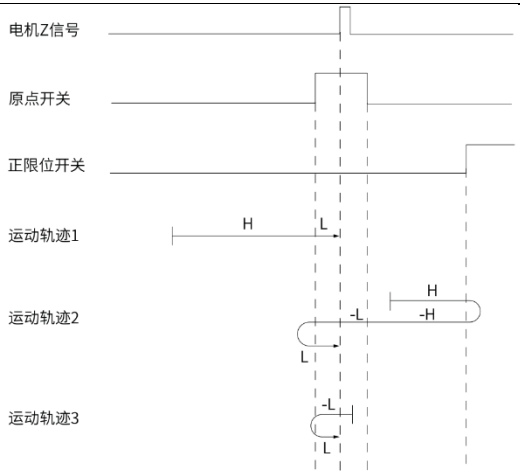 Forward return to zero, deceleration point is the origin switch, and the origin is the motor Z signal (P05-41=4)	■ Movement trajectory 1: When the motor starts moving, the origin switch signal is invalid, and the forward over travel switch is not triggered throughout the entire process. ■ Motion trajectory 2: When the motor starts moving, the origin switch signal is invalid, and the forward over travel switch is triggered during the process. ■ Motion trajectory 3: When the motor starts moving, the origin switch signal is valid, and the forward over travel switch is not triggered throughout the entire process.。

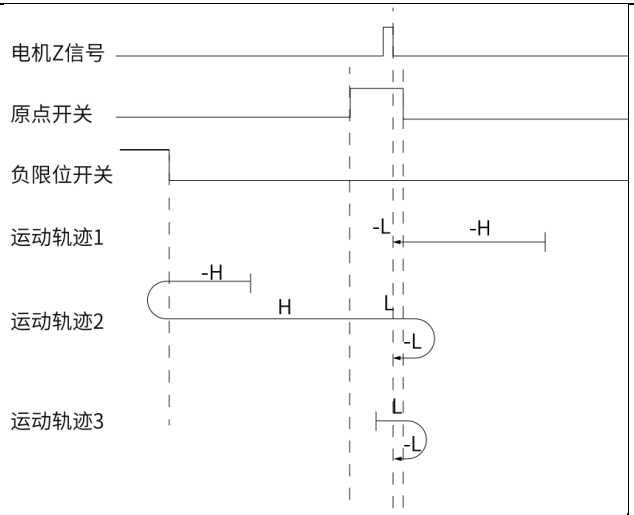

Reverse return to zero, with the deceleration point at the origin switch and the origin at the motor Z signal（P05-41=5）

■ Movement trajectory 1: When the motor starts moving, the origin switch signal is invalid, and the reverse overtravel switch is not triggered throughout the entire process.

■ Motion trajectory 2: The origin switch signal is invalid when the motor starts moving, and the reverse over travel switch is triggered during the process.

■ Motion trajectory 3: When the motor starts moving, the origin switch signal is valid, and the reverse over travel switch is not triggered throughout the entire process.

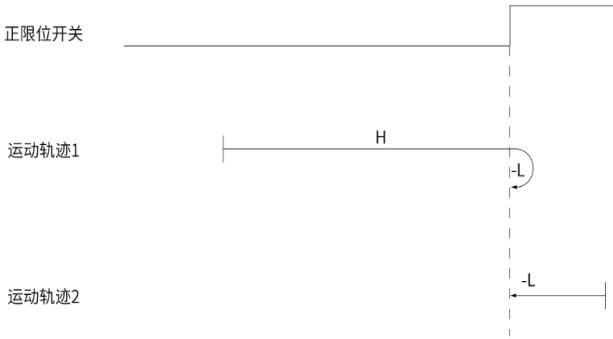

Forward return to zero, deceleration point and origin are forward overtravel switches (P05-41=6)

■ Movement trajectory 1: The forward over travel switch signal is invalid when the motor starts moving.

■ Motion trajectory 2: The forward over travel switch signal is valid when the motor starts moving.

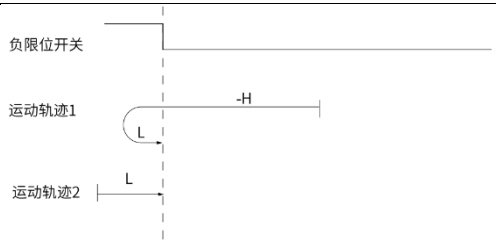

Reverse return to zero, deceleration point and origin are reverse overtravel switches (P05-41=7)

■ Movement trajectory 1: The reverse over travel switch signal is invalid when the motor starts to move.

■ Motion trajectory 2: The reverse over travel switch signal is valid when the motor starts moving.

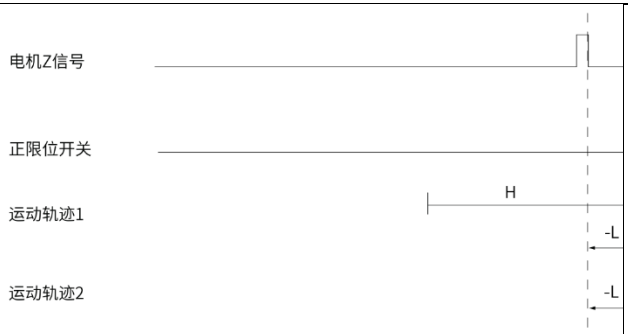 Forward return to zero, deceleration point is forward overtravel switch, origin is motor Z signal (P05-41=8)	■ Movement trajectory 1: The forward over travel switch signal is invalid when the motor starts moving. ■ Motion trajectory 2: The forward over travel switch signal is valid when the motor starts moving.
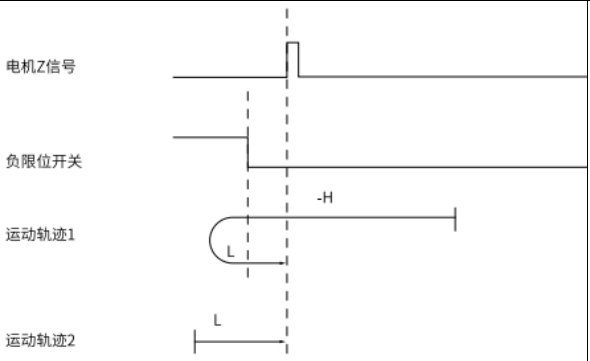 Forward return to zero, deceleration point is forward overtravel switch, origin is motor Z signal (P05-41=8)	■ Movement trajectory 1: The reverse over travel switch signal is invalid when the motor starts to move. ■ Motion trajectory 2: The reverse over travel switch signal is valid when the motor starts moving.

5.13.2 Using the current position as the origin

During on-site use, there is often a need to set the servo zero position. There are three ways to set the servo zero position:

Zero return enable mode (P05-40)	conditions for execution	description
1-DI input enables zero return to origin	● Servo enable ● P05-41 = 10 ● DI（32）trigger	Both column 1 (P05-40) and column 2 (execution condition) must be met in order to set the current position as the origin。
2-DI input enables electrical zeroing	● Servo enable ● DI（30）trigger	
6- Using the current position as the origin	anytime	

Special attention: When using communication to write 6 to P5-40 to perform the "use current position as origin" function, the servo will automatically write P5-40 to 0 after the origin regression is completed. Please be careful not to keep writing 6 to P5-40, otherwise the servo will remain in the set origin state.

5.13.3 Origin and Zero Point

The relationship between origin and zero is mainly related to P5-48 (origin offset) and P5-46 (origin offset method).

When the P5-48 offset is set to 0, the zero point coincides with the origin. After the origin regression is completed, the current position is the origin, and the current position is also the zero point.

When P5-48 (offset) is not set to 0, after returning to the original position, the relationship between the origin and zero points is determined based on the P5-46 offset method. When P5-46 is set to 0 or 2, it stops once the origin is found and the current position is set to the value of P5-48 (offset); When P5-46 is 1 or 3, find the origin and then move P5-48 (offset).

P5-48 offset	P5-46 offset method	Operation effect	Origin and Zero Point Relationship
= 0	-	Stop after finding the origin and reset the current position to zero	The origin and zero point coincide
= 0	-	Stop after finding the origin and reset the current position to zero	
≠ 0	0/2	Stop after finding the origin and set the current position to the value of P05-48	The origin and zero point not coincide
≠ 0	1/3	After finding the origin, reset the current position to zero, and then move the offset of P05-48	The origin and zero point coincide

5.13.4 Examples of Use

Implement a case where the origin can be set while running a certain distance and then returning to the set origin:

1) Set P05-40 to 2 and set the zeroing mode to electrical zeroing mode
2) Move the servo to the target origin position and input a trigger signal to the DI configured as number 30 to set the current position as the origin
3) The motor performs normal machining processes
4) When it is necessary to move the motor to the origin position set in "Step 2", input a current signal to the DI configured as number 32, and the motor can be moved to the origin position set in "Step 2" in the method of electrical zeroing.

Code related to origin reset

Code	Name	Set range	Unit	value	Effective method	Set method	Set mode
P05-40	Origin reset enable	0-Close Origin Reset 1-Enable the origin reset function through DI input ORGSET signal 2-Enable electrical zeroing function by inputting ORGSET signal through DI 3-Immediately start the origin reset after power on 4-Immediately reset the origin point 5-Immediately electrical zeroing 6-Using the current position as the origin	--	0	Effective immediately	Set anytime	Ordinary user

Code	Name	Set range	Unit	value	Effective method	Set method	Set mode
P05-41	Origin reset mode	0-Forward return to zero, deceleration point is the origin switch 1. Reverse to zero, deceleration point is the origin switch 2- Forward return to zero, deceleration point is Z signal 3- Reverse to zero, deceleration point is Z signal 4- Forward return to zero, deceleration point is the origin switch signal, origin is the Z signal 5- Reverse to zero, deceleration point is the origin switch signal, origin is the Z signal 6-Forward return to zero, deceleration point and origin are forward limit switches 7-Reverse return to zero, deceleration point and origin are reverse limit switches 8-Forward return to zero, deceleration point is forward limit switch, origin is Z signal 9-Reverse return to zero, deceleration point is reverse limit switch, origin is Z signal 10. The current position can be set as the origin through DI triggering (32)	--	0	Effective immediately	Set anytime	Ordinary user
P05-42	Origin high-speed search speed	0~3000	rpm	100	Effective immediately	Set anytime	Ordinary user
P05-43	Origin low-speed search speed	0~1000	rpm	10	Effective immediately	Set anytime	Ordinary user
P05-44	Origin acceleration and deceleration time	0~1000	ms	1000	Effective immediately	Set anytime	Ordinary user
P05-45	Origin search time	0~65535	ms	50000	Effective immediately	Set anytime	Ordinary user

Code	Name	Set range	Unit	value	Effective method	Set method	Set mode
P05-46	Origin offset and limit handling methods	0~3（according to bit） bit0-origin offset or not bit1-reverse change when encountering a limit position or not	0	0	Effective immediately	Set anytime	Ordinary user
P05-48	Origin mechanical offset	-1073741824~1073741824	ins	0	Effective immediately	Set anytime	Ordinary user

6 Fault Handling

6.1 Troubleshooting before operation

Fault phenomenon	Fault reason	Handling methods
1、The digital tube does not light up 2、The digital display is not ready, and the two rightmost digital displays are "nr"	1. Abnormal power supply voltage	Check the input power specifications of the driver and measure whether the input voltage on the non driver side and driver side (L1 L2 L3) of the main circuit cable meets the following specifications: 220V driver Effective value: 220V-240V Allowable deviation: -10%~+10% (198V~264V) 380V driver Effective value: 380V-440V Allowable deviation: -10%~+10% (342V~484V)
	2、servo driver fault	Back to factory repair.
After the servo enable signal is set to ON, the servo motor is in a free running state	1.The servo enable signal is invalid (the two digital tubes at the last of the tube display "rd" instead of "ru")	1. Check P01 group to see if the servo enable signal DI terminal and effective logic are correctly set. The factory default DI1 configuration is servo enable signal input ("P1-04 DI1 terminal function selection" is set to "[1] servo enable"), and "P1-20 DI1 terminal logic selection" is set to "[0] ON effective") 2. Check if the external enable switch circuit is working properly
	2. Control mode selection error	Check if the 'P0-00 Control Mode Selection' is incorrectly configured as' [2] Torque Mode '(default torque command is zero)

	3. Wiring error	1. Check if the power lines U, V, W, and PE of the motor are reliably connected to the servo
	4. Motor damage	2. Check if the power lines of other axis motors have been connected to the driver incorrectly
Panel display “AL.xxx”	Servo malfunction	Replace the motor

6.2 Troubleshooting during runtime

6.2.1 Troubleshooting of Operational Malfunctions

Servo enabled state will displayed as "ru" on the tube,and if the servo has not entered the enabled state, please follow the method of "1.1 Troubleshooting before Operation" for troubleshooting.

After inputting the command, the servo did not run as expected or ran unevenly. Please follow the suggestions in the table below for troubleshooting.

Fault phenomenon	Fault reason	Handling methods
When inputting commands, the motor does not rotate	1. Wiring error	Please refer to Chapter 3 "Wiring" to ensure that the command pulse signal line is correctly connected, the enable switch, and the overtravel switch are correctly connected
	2.Servo parameter configuration error	**Location operation mode** 1. Ensure that the "P5-15 position command source" is consistent with the actual input position command method 2. Ensure that the "P5-16 instruction pulse shape" is consistent with the actual input instruction pulse signal shape (when inputting the AB signal, the incorrect configuration is "[0] pulse+direction", and the pulse count will be very small) 3. Ensure that the "P5-00 Single Cycle Pulse Number" is set correctly. When the value of the single cycle

		pulse number is large, the actual rotation of the motor is very small after inputting the command pulse **Speed operation mode** 1. Ensure that the command source set for "P6-00 Speed Command Selection" matches the actual input command When selecting analog input commands, check whether the AI analog input channel selection is correct ("P6-01 speed command A source", "P6-02 speed command B source"), and check whether the AI terminal wiring is correct When the number is given, check if the "P6-03 speed command digital setting value" is correct When the jog speed command is given, check whether the "P6-04 jog speed setting value" is correct, check whether the P01 group has set the DI function "[18] forward jog" and "[19] reverse jog", and whether the corresponding terminal logic is valid 2. Check if the "P6-05 Speed Command Acceleration Time" and "P6-06 Speed Command Deceleration Time" settings are correct **Torque operation mode** Ensure that the command source set for "P7-00 torque command source" matches the actual input command When selecting analog input commands, check whether the AI analog input channel selection is correct ("P7-01 torque command A source", "P7-02 torque command B source"), and check whether the AI terminal wiring is correct When the number is given, check if the "P7-03 torque command digital setting value" is correct
	3.The input command has not taken effect	1、1. Ensure that the servo is not in an alarm state (the panel status page displays "AL. xxx"). If an alarm occurs, refer to section 6.2 to identify the cause and troubleshoot the issue 2、2. Ensure that the servo is in the enabled state when the command is sent (the last two digital tubes on the panel display "ru"). If it is not in the enabled state, check P01 group to see if the servo enable signal DI terminal and effective logic are correctly set, and if the enable switch circuit is working properly 3、Ensure that the DI function "[13] pulse disable", "[37] pulse command disable", or "[12] zero clamp"

		is not used incorrectly
When inputting command, the motor rotates in the wrong direction	Parameter configuration error	**Location operation mode** 1. Check if the "P02-02 Motor Rotation forward Direction Definition" is set correctly 2. Check if the "P05-17 instruction pulse signal inversion" setting corresponds to the actual input pulse polarity, and verify if the terminal wiring is correct 3. Check if the DI function "[27] Position Command Direction" has been set and if the corresponding terminal logic is valid **Speed operation mode** 1. Check if the "P02-02 Motor Rotation forward Direction Definition" is set correctly 2. When selecting analog input commands, check if the polarity of the input signal is reversed 3. When the value is given, check if the "P6-03 speed command digital setting value" is correct 4. Check if the DI function "[26] Speed Command Direction" has been set and if the corresponding terminal logic is valid 5. When the jog speed command is given, check whether the "P6-04 jog speed setting value" is correct, check whether the P01 group has set the DI function "[18] forward jog" and "[19] reverse jog", and whether the corresponding terminal logic is valid **Torque operation mode** 1.Check if the "P02-02 Motor Rotation forward Direction Definition" is set correctly 2.When selecting analog input commands, check if the polarity of the input signal is reversed Check if the DI function "[25] Torque Command Direction" has been set and if the corresponding terminal logic is valid

1、Unstable speed during low-speed operation 2、Vibration occurs during running	1、Unreasonable gain setting	1. Adjust the rigidity level (when the value of "P3-00 self-tuning mode selection" is not "[0] manually adjust the gain parameter", adjust "P3-01 rigidity level") 2. Perform gain adjustment. When the value of "P3-00 self-tuning mode selection" is set to "[0] manual adjustment of gain parameter", adjust parameters such as "P3-04 position loop gain", "P3-05 speed loop gain", "P3-06 speed loop integration time constant", etc **Unstable during low-speed operation, try increasing the rigidity level** **Vibration during operation, try to reduce the rigidity level**
	2、"P03-02 load moment of inertia ratio mismatch	1、In safe operation status, perform "F-003 inertia identification" 2、Estimate the load inertia ratio and manually fill in the parameter 'P3-02 load inertia ratio'
Inaccurate positioning	Refer to the next section "7.2.2 Troubleshooting for inaccurate positioning" for handling	

6.2.2 Inaccurate positioning investigation

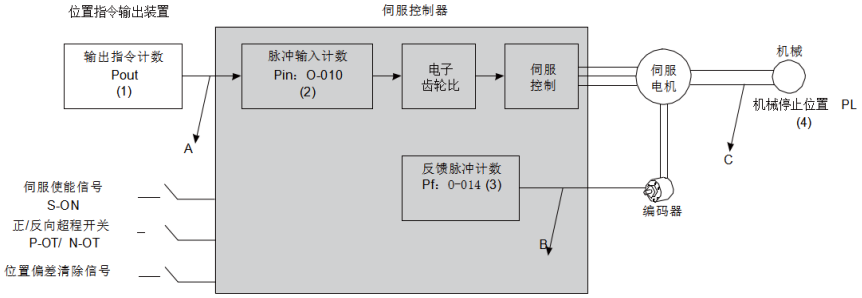

Figure 6-1 Servo positioning control process

Inaccurate positioning occurred, check the 4 signals in the above picture

(1) The output command count Pout (internal parameter of the controller)

(2) The input position command counter Pin received by the servo controller corresponds to the parameter "O-010 pulse command count"

(3) The feedback pulse accumulation value Pf of the servo motor's built-in

encoder corresponds to the parameter "O-014 Feedback Pulse Count"

(4) Mechanical stop position PL

In an ideal state where no positional deviation occurs, the following relationship holds：

- Pout = Pin
- Pf = Pin × Electronic gear ratio
- PL = Pf × ΔL，that ΔL is： 1 position instruction corresponds to load displacement

Follow the method shown in the table below to troubleshoot the problem one by one

phenomenon	Pout ≠ Pin
Reason for malfunction	① In the wiring between the position command output controller (such as PLC) and the servo driver, the input position command counting error is caused by the influence of current noise ② During the operation of the motor, the input position command is interrupted.
Troubleshooting methods	① Check if the pulse input terminal (refer to Chapter 3 "Wiring") uses twisted pair shielded wire ② If conditions permit, use differential input for pulse command signals ③ The wiring of the pulse input terminal must be separated from the main circuit (L1, L2, L3, U, V, W) and routed separately ④ Increase the "P5-18 pulse signal filtering time" and "P5-19 direction signal input filtering time" ⑤ Check if the "P5-16 Command Pulse Form" matches the actual input signal type ⑥ Ensure that the '[2] servo enable' signal is not erroneously set to invalid during operation, default DI1 configuration is' [2] servo enable ' ⑦ Ensure that the "[14] forward overtravel" or "[15] reverse overtravel" signals are not activated during operation. The default DI3 configuration is "[14] forward overtravel" and DI4 configuration is "[15] reverse overtravel" ⑧ If the DI terminal is configured with "[13] pulse disable" or "[37] pulse command disable", ensure that the "[13]

	pulse disable" or "[37] pulse command disable" signal is not activated during operation

Pf ≠ Pin × electronic gear ratio
Encoder feedback position signal error (signal interference)
① Check if there was a malfunction during operation that resulted in incomplete execution of instructions and servo shutdown ② If the DI terminal is configured with "[35] position deviation clearing", ensure that the "[35] position deviation clearing" signal does not take effect during operation ③ Check if the "P5-50 position deviation clearing action" is reasonable

PL ≠ Pf × ΔL
Mechanical position sliding occurred between the machine and servo motor
Step by step check the connection status of the machinery and identify the location where relative sliding occurred

6.3 Software Alarm Handling

6.3.1 Alarm category and display

The faults and warnings of servo drives can be classified into three levels based on their severity: Type 1 errors, Type 2 errors, and warnings.

Severity level: Type 1 error>Type 2 error>Warning.

When a single alarm or warning occurs, the status menu of the drive tube will immediately display the current alarm or warning code. When multiple alarms or warnings occur, the alarm code with the highest severity level will be displayed.

Different alarm levels have different displays, and the digital tube alarm displays A.Lxxx represents a type 1 alarm, AL.xxx represents a type 2 alarm, and AL xxx represents a warning;；

example：

A.L040 is an absolute encoder communication abnormality alarm, which belongs to a type of error. It will be displayed on the tube as:

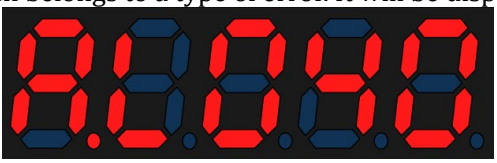

AL.099 is a motor stalling overheat protection alarm, which belongs to Type 2 error. It will be displayed on the tube as：

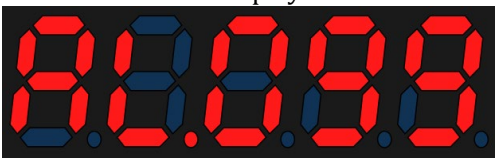

AL029 is a warning for driver motor mismatch, which is displayed on the panel as:

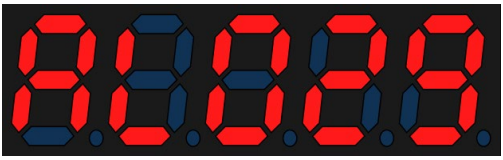

Alarm clearing instructions: Before clearing type 1 and type 2 alarms, the servo enable needs to be turned off first. If it is necessary to forcibly clear the alarm while continuously in enable status, please set PB-29 to 1. Note that this usage may pose a safety hazard.

The following table shows the servo software alarms, describing the alarm names corresponding to the alarm IDs, the clear able attributes of the alarms, and the alarm types.

Alarm ID	Alarm name	Clear able	Alarm type
10	User parameter configuration error	no	Type 1 error

11	User parameter verification error	no	Type 1 error
12	The user parameter value is invalid	no	Type 1 error
13	Parameter storage failure	no	Type 1 error
14	Parameter reading fault	no	Type 1 error
15	EEPROM read and write too fast	no	Type 1 error
25	Wrong motor model	no	Type 1 error
26	Driver model error	no	Type 1 error
27	Driver motor mismatch	yes	warning
28	User defined motor	yes	warning
30	Encoder type error	no	Type 1 error
39	Absolute value system matching error	no	Type 1 error
40	Absolute encoder communication abnormality	no	Type 1 error
41	Absolute encoder counting abnormality	no	Type 1 error
42	Absolute encoder EEPROM reading abnormal	no	Type 1 error
43	Absolute encoder multi turn counting error	yes	Type 2 error
44	Absolute encoder multi turn counter overflow	yes	Type 2 error
45	Absolute encoder battery failure	yes	Type 2 error
46	Absolute encoder battery alarm	yes	warning
47	Absolute encoder overheating	yes	warning
50	Absolute encoder EEPROM data not burned	no	Type 1 error
55	Current sampling overflow	yes	Type 1 error
56	Current sampling is too slow	yes	Type 1 error
60	Error in setting the number of pulses per cycle	yes	Type 2 error
61	Electronic gear ratio 1 setting error	yes	Type 2 error
62	Electronic gear ratio 2 setting error	yes	Type 2 error
64	DI signal allocation error	yes	Type 1 error
65	Duplicate DI allocation	yes	Type 1 error
66	DO allocation error	yes	Type 1 error
67	DI configuration failed	yes	Type 1 error
70	Undervoltage	yes	Type 1 error
71	Overvoltage	yes	Type 1 error

72	Control power undervoltage	no	Type 1 error
73	Abnormal boost of bus voltage	yes	Type 1 error
74	Power line phase loss	yes	Type 2 error
75	Soft start relay damaged	yes	Type 2 error
76	Power phase loss warning	yes	warning
77	IGBT temperature is too high	no	Type 1 error
78	The temperature of the heat sink is too high	no	Type 1 error
80	MCU emergency stop	no	Type 1 error
82	Bus overcurrent	no	Type 1 error
83	U phase overcurrent	no	Type 1 error
84	V-phase overcurrent	no	Type 1 error
85	W-phase overcurrent	no	Type 1 error
90	UVW wiring error	no	Type 1 error
91	Suddenly high speed rotation	no	Type 1 error
92	speeding	yes	Type 1 error
95	Drive overload	yes	Type 2 error
96	motor overload	yes	Type 2 error
97	motor overload	yes	Type 2 error
98	Motor overload warning	yes	warning
99	Motor stalling and overheating protection	yes	Type 2 error
100	The servo ON command is invalid	yes	Type 2 error
101	Excessive positional deviation	yes	Type 2 error
102	Abnormal position command input	yes	Type 2 error
105	Frequency division pulse output overspeed	yes	Type 2 error
106	Accumulated overflow of frequency divided pulses	yes	Type 2 error
107	Unreasonable setting of frequency division pulse output	yes	Type 2 error
108	Origin reset to zero timeout error	yes	warning
109	Overload of regenerative braking resistor	yes	warning
110	Regenerative braking resistor overcurrent	yes	warning
111	The resistance of the external regenerative braking resistor is too low	yes	warning
112	Motor power line broken	yes	warning

113	Restart prompt	yes	warning
114	Forward overtravel warning	yes	warning
115	Reverse overtravel warning	yes	warning
116	AI zero offset is too large	yes	warning
117	AI1 input too large	yes	warning
118	AI2 input too large	yes	warning
120	AI1 zeroing failed	yes	warning
121	AI2 zeroing failed	yes	warning
125	Command pulse signal wiring error	yes	Type 2 error
126	Direction signal interference error	yes	warning
127	Direction signal interference error	no	Type 1 error

6.3.2 Alarm Records

The servo drive has a fault recording function, which can record the names of the last 10 faults and warnings, as well as the status parameters of the servo drive when the fault or warning occurred. If the current alarm ID occurs in the last 5 different alarm records, the current alarm will not be recorded.

After the "alarm clearing" action, the fault record will still save the fault and warning. Except that writing "[2] clear alarm record" through the function code "F-001 alarm clearing", the stored alarm records can be cleared.

By monitoring the parameter 'O-057 Fault Record Index', the alarm record index to be observed can be set. The alarm record information specified by O-057 can be viewed through O-058~O-074. After setting this value to n, O-058~O-074 displays the latest n+1th alarm information. For example, when n=0, it is the latest alarm.

Code	Code name	Unit	Code description
O-057	Fault record index		Fault record index, readable and writable
O-058	Fault code		The fault code of the selected alarm
O-060	Fault time	0.1s	Selected fault time
O-062	Speed during malfunction	rpm	Speed at selected fault
O-063	U-phase current during malfunction	0.01A	U-phase current during selected fault

O-064	V-phase current during malfunction	0.01A	V-phase current during selected fault
O-065	Bus voltage during malfunction	0.1V	Bus voltage at selected fault
O-066	Input terminal status during malfunction		Input terminal status when selecting faults
O-067	Output terminal status during malfunction		Output terminal status at selected fault
O-068	Command speed during malfunction	rpm	Command speed at selected fault
O-069	Command torque during malfunction	‰	Command torque for selected faults
O-070	Feedback torque during malfunction	‰	Feedback torque for selected faults
O-071	Position command during malfunction	p	Position command for selected fault
O-072	Position deviation during malfunction	p	Position deviation during selected fault
O-073	Control word during malfunction		Control word for selected fault
O-074	Status word during malfunction		Status word for selected fault

6.3.3 Software Alarm Handling Methods

Alarm code	Alarm name	Fault reason	Handling method
11	User parameter verification error	1.Power outage occurs during parameter reset process 2.Firmware update	1. After the servo enable input is OFF, perform parameter reset operation (F-000 =2) and restart the servo (power off restart or F-000= 1) 2. set P0-25= 1 to turn off this alarm
12	user parameter value is invalid	The parameter value is less than the specified minimum value or greater than the specified maximum value	1. After the servo enable input is OFF, perform parameter reset operation (F-000=2) and restart the servo (power off restart or F-000 = 1) 2. Check the abnormal parameter group number and offset through O-078 and O-079, and correct the corresponding parameter values.
13	Parameter storage failure	User parameter EEPROM write failed	1. Check if EEPROM is damaged or has virtual soldering 2. Replace the drive

14	Parameter reading fault	User parameter EEPROM read failed	1、Check if EEPROM is damaged or has virtual soldering 2、Replace the drive
15	Parameter write overflow	EEPROM write request too fast	1. Check if parameters are frequently written. If pulse servo does require continuous writing through RS485, add 1 before the highest bit of the write address (such as changing the address of parameter P0540 from 0x528 to 0x8528). If EtherCAT bus servo uses SDO to frequently write data, P09-13 can be set to 0. 2. Check if the operation with the current position as the origin (P5-40 is set to 6). If so, please note that the setting only needs to be set once and does not need to be repeated. After returning to the original position, P5-40 will automatically reset to zero.
21	Location execution timeout fault	When the position loop is executed continuously for 4 times and the execution cycle is too long	1、Replace the drive 2、Contact our technical team
25	Motor model error	1. The firmware is too old to support this motor	Update Firmware
		2.Unsupported motor model set	Check if the "P0-01 motor model" setting is correct
26	Driver mode error	Set the Wrong drive model	Check if the "P11-00 Drive Model" setting is correct
27	Driver and motor do not match	Rated power motor＞driver	1. Check if the "P0-01 motor model" setting is correct 2. Check if the "P11-00 Drive Model" setting is correct 3. Replace the driver with higher power or replace the motor with lower power 4. If it is confirmed that the motor and driver can be matched for use, P0B-28=1 can be set to shield this warning。
28	User defined motor	Set P00-01=65535	1、Ignore this warning 2、Set P0B-27 =1 to turn off this warning
30	Encoder type error	Set Unsupported encoder type	1.Check if the "P0-01 motor model" setting is correct 2.Check if the motor encoder cable connection is normal
39	Absolute value system matching error	Absolute value mode was selected (P0.03=1 or 2), and the resulting motor is a single turn motor	1. Determine whether the motor is a single turn motor or a multi turn motor based on the motor nameplate. If it is a single turn motor, it needs to be replaced with a multi turn motor 2.when the motor is a multi turn motor and P0.03 is set to 1 or but still alarms Al.039, it is necessary to contact our technical team to update the motor parameters

40	Absolute encoder communication abnormality	2. Encoder cable connection failure	1. Check if the motor encoder cable is correctly connected to the servo 2. Check if the motor encoder cable is properly conductive (replaceable encoder cable for testing)
		3. Encoder damaged	Replace motor
41	Absolute encoder counting abnormality	Encoder fault	1、encoder reset operation (write 1 for "F-004 Absolute Encoder Reset Operation") 2、If it occurs repeatedly, replace the motor
42	Absolute encoder EEPROM reading abnormal	Encoder fault	1、Check if the "P0-01 motor model" setting is correct 2、Check if the motor encoder cable connection is normal 3、Replace the motor
43	Absolute encoder multi turn counting error	Encoder fault	1、encoder reset operation (write 1 for "F-004 Absolute Encoder Reset Operation") 2、If it occurs repeatedly, replace the motor
44	Absolute encoder multi turn counter overflow	Encoder fault	1、encoder reset operation (write 1 for "Fn-004 Absolute Encoder Reset Operation") 2、Set P0B-17 prohibit encoder multi loop overflow fault ,parameter =1, turn off alarm 3、If the encoder does not require multi turn mode, please set P00-03 to 0 and set it to single turn mode 4、Replace the motor
45	Absolute encoder battery failure	1. Encoder battery not connected	1. Check if the encoder cable comes with a battery pack 2. Check if the motor encoder cable is properly conductive
		2. Encoder battery low	Replace the battery with a voltage matching (3.6V)
46	Absolute encoder battery alarm	1. The encoder battery voltage is lower than the alarm voltage	Replace the battery with a voltage matching (3.6V)
		2. Encoder battery low	
47	Absolute encoder overheating	1、Encoder temperature too high	1. Improve the heat dissipation conditions of the motor 2. encoder reset operation (write 1 for "F-004 Absolute Encoder Reset Operation")
		2、encoder broken	If it occurs repeatedly, replace the motor
50	Motor model not written in	The model number of the motor was not written in when production	Contact the supplier to replace the motor 2. Contact technical personnel to write the motor model number

			3. Check if the firmware version of P016-00 is 1.31 or above,
60	Error in setting the number of pulses per cycle	The number of pulses per cycle is set too small or too large	Ensure that the value range of P5-00 for the number of pulses per cycle is 3~10^7
61	Electronic gear ratio 1 setting error	The setting of electronic gear ratio 1 is unreasonable	Ensure that the gear ratio setting satisfies the following relationship P0501: Electronic gear ratio 1 molecule P0502: Electronic gear ratio 1 denominator P1002: Encoder single cycle pulse count
62	Electronic gear ratio 2 setting error	The setting of electronic gear ratio 2 is unreasonable	Ensure that the gear ratio setting satisfies the following relationship P0503: Electronic gear ratio 2 molecules P0504: Electronic gear ratio 2 denominator P1002: Encoder single cycle pulse count
64	DI signal allocation error	DI assigned signals that are not allowed	Check the P01 group parameters to ensure that no illegal values are used in the configuration of each DI function
65	Duplicate DI allocation	When allocating DI functions, the same function is repeatedly assigned to multiple DI terminals	1. Check the P01 group parameters to ensure that there are no duplicate configurations for each DI function 2. Check the P15 group parameters to ensure that there are no duplicate items in the virtual IO allocation function
66	DO allocation error	DO has assigned signals that are not allowed	1. Check the P02 group parameters to ensure that no illegal values are used in the configuration of each DO function 2. Check the P15 group parameters to ensure that there are no duplicate items in the virtual IO allocation function
70	Under voltage	1. The input voltage of the power supply is too low	Check the input power specifications of the driver and measure whether the input voltage on the non driver side and driver side (L1 L2 L3) of the main circuit cable meets the following specifications: **220V driver** Valid value：220V-240V Allow deviation：-10%~+10%(198V~264V) **380V driver** Valid value： 380V-440V Allow deviation：-10%~+10%(342V~484V)
		2. Instantaneous power outage occurs	Ensure stable power supply

		3. Power supply voltage drops during operation	Monitor the input power voltage of the driver and check if the same main circuit power supply has turned on too many other devices, causing insufficient power capacity and voltage drop
		4. Power phase loss	Check the input power specifications of the drive. If it is a three-phase power supply, ensure that L1, L2, and L3 have three-phase power connected
71	Over voltage	1、The input voltage of the main circuit is too high	Check the input power specifications of the driver and measure whether the input voltage on the non driver side and driver side (L1 L2 L3) of the main circuit cable meets the following specifications: 220V driver Effective value: 220V-240V Allowable deviation: -10%~+10% (198V~264V) 380V driver Effective value: 380V-440V Allowable deviation: -10%~+10% (342V~484V)
		2、The braking resistor is not connected, damaged, or too much resistance value	1、Check and connect the braking resistor (if the external P and D are short circuited, use the internal braking resistor); External braking resistor connected through P and C 2、Measure the resistance value of the braking resistor (after the servo is powered off, measure the resistance value between the power terminals P and C). If the resistance value is too high, replace it with the recommended braking resistor. After replacement, set P00-05~P00-07 according to the actual situation. For the selection method of the braking resistor, refer to the braking resistor selection instructions
		3、Excessive backflow energy during rapid deceleration	1.If the working conditions permit, increase the deceleration time during operation 2. Reduce the load and, if conditions permit, purchase a gearbox

72	Control power under voltage	1、The input voltage of the power supply is too low	Check the input power specifications of the driver and measure whether the input voltage on the non driver side and driver side (L1 L2 L3) of the main circuit cable meets the following specifications: 220V driver Effective value: 220V-240V Allowable deviation: -10%~+10% (198V~264V) 380V driver Effective value: 380V-440V Allowable deviation: -10%~+10% (342V~484V)
		2 、 Unstable power supply	1. Check if the power cable has good contact 2. Check if the power supply is stable
73	Abnormal bus line voltage rise	Frequent power on/off causing abnormal power supply	1. Ensure that the interval between power on and off of the drive is not less than 1 minute 2. If an alarm has been triggered, wait for 3 minutes after power failure to restore power supply 3. P00-15 is set to 1. Turning off the power-off rapid discharge function can reduce the occurrence of this alarm. 4. When P0B-30 is set to 3000, this alarm can be blocked
74	Power line phase loss	Three phase input wiring error	1. Check if three-phase power supply is used (L1, L2, L3 are all connected) 2. Check if the power cable is in good contact 3. Setting the "PB-02 Power Input Phase Loss Protection Selection" to 2 can block this alarm
75	Soft start relay damaged	Hardware soft start relay damaged	Return to the factory for repair and replace the soft start relay
76	Power phase loss warning	Three phase input wiring error	1. Check if three-phase power supply is used (L1, L2, L3 are all connected) 2. Check if the power cable is in good contact 3. Setting the "PB-02 Power Input Phase Loss Protection Selection" to 2 can block this alarm
77	IGBT temperature is too high	1. The ambient temperature is too high	1. Improve the cooling conditions of the drive and strictly follow the recommended installation direction and interval for the drive installation 2. Reduce the ambient temperature of the servo drive
		2. Fan malfunction	1. Check if the fan blades are stuck by other objects 2. Replace the drive
		3. Long term overload operation	1. Increase the acceleration and deceleration time during operation 2. Reduce load 3. Replace with higher power drivers and motors

78	The temperature of the heat sink is too high	1. The ambient temperature is too high	1. Improve the cooling conditions of the drive and strictly follow the recommended installation direction and interval for the drive installation 2. Reduce the ambient temperature of the servo drive
		2. Fan malfunction	1. Check if the fan blades are stuck by other objects 2. Replace the drive
		3. Long term overload operation	1. Increase the acceleration and deceleration time during operation 2. Reduce load 3. Replace with higher power drivers and motors
82	Bus line over current	1. The braking resistor is too small or short circuited	When using the built-in braking resistor (P, D short circuit) Disconnect the power terminals P and D, measure the resistance between D and C. If the resistance is 0, replace the built-in braking resistor When using an external braking resistor (P, C connected) Measure the resistance value of the external braking resistor. If there is a short circuit or it is too small, replace the external braking resistor. Please follow the "Braking resistor selection instructions" to select the braking resistor. After replacement, set P00-05~P00-07 according to the actual situation
		2. Motor power line wiring error	1. Check the correctness of the wiring of the motor power lines U, V, W, and PE 2. Check if the wiring of the motor power lines U, V, W, and PE is loose
		3. Motor power line short circuit	1. Check the wiring of the motor power lines U, V, W, and PE, and observe if there is a short circuit 2. Disconnect the motor power line from the servo connection, measure whether there is a short circuit between the motor U, V, W, and PE. If there is a short circuit, replace the motor
		4. Motor damage	Disconnect the motor power line from the servo connection, measure whether the resistance between motor U, V, and W is balanced (measure the resistance between UV, UW, and VW respectively). If it is unbalanced (the resistance difference between the three measurements is too large), replace the motor
		5. Abnormal input command	1. Ensure to input commands after servo enable ON 2. Increase the acceleration and deceleration time of input commands
		6. Unreasonable gain setting	Servo gain adjustment, the servo gain can be set to the factory default value and readjusted to reduce overshoot
83		1. Motor power line wiring error	1. Check the correctness of the wiring of the motor power lines U, V, W, and PE 2. Check if the wiring of the motor power lines U, V, W, and PE is loose

	U phase over current	2. Motor power line short circuit	1. Check the wiring of the motor power lines U, V, W, and PE, and observe if there is a short circuit 2. Disconnect the motor power line from the servo connection, measure whether there is a short circuit between the motor U, V, W, and PE. If there is a short circuit, replace the motor
		3. Motor damage	Disconnect the motor power line from the servo connection, measure whether the resistance between motor U, V, and W is balanced (measure the resistance between UV, UW, and VW respectively), if it is unbalanced (the resistance difference between the three measurements is too large), replace the motor
		4. Abnormal input command	1、1. Ensure to input commands after servo enable ON 2、2. Increase the acceleration and deceleration time of input commands
		5. Unreasonable gain setting	Servo gain adjustment, the servo gain can be set to the factory default value and readjusted to reduce overshoot
84	V phase over current	1. Motor power line wiring error	1. Check the correctness of the wiring of the motor power lines U, V, W, and PE 2. Check if the wiring of the motor power lines U, V, W, and PE is loose
		2. Motor power line short circuit	1. Check the wiring of the motor power lines U, V, W, and PE, and observe if there is a short circuit 2. Disconnect the motor power line from the servo connection, measure whether there is a short circuit between the motor U, V, W, and PE. If there is a short circuit, replace the motor
		3. Motor damage	Disconnect the motor power line from the servo connection, measure whether the resistance between motor U, V, and W is balanced (measure the resistance between UV, UW, and VW respectively), if it is unbalanced (the resistance difference between the three measurements is too large), replace the motor
		4. Abnormal input command	3、1. Ensure to input commands after servo enable ON 4、2. Increase the acceleration and deceleration time of input commands
		5. Unreasonable gain setting	Servo gain adjustment, the servo gain can be set to the factory default value and readjusted to reduce overshoot
85	W phase over current	1. Motor power line wiring error	1. Check the correctness of the wiring of the motor power lines U, V, W, and PE 2. Check if the wiring of the motor power lines U, V, W, and PE is loose
		2. Motor power line short circuit	1. Check the wiring of the motor power lines U, V, W, and PE, and observe if there is a short circuit 2. Disconnect the motor power line from the servo connection, measure whether there is a short circuit

			between the motor U, V, W, and PE. If there is a short circuit, replace the motor
		3. Motor damage	Disconnect the motor power line from the servo connection, measure whether the resistance between motor U, V, and W is balanced (measure the resistance between UV, UW, and VW respectively), if it is unbalanced (the resistance difference between the three measurements is too large), replace the motor
		4. Abnormal input command	5、1. Ensure to input commands after servo enable ON 6、2. Increase the acceleration and deceleration time of input commands
		5. Unreasonable gain setting	Servo gain adjustment, the servo gain can be set to the factory default value and readjusted to reduce overshoot
90	UVW wiring error	Motor power line UVW wiring error	Check the UVW wiring of the motor power line and correct any wiring errors
91	Sudden Speed motor	1. Motor power line UVW connected incorrectly	Check the UVW wiring of the motor power line and correct any wiring errors
		2. Motor model setting error	Check if the "P0-01 motor model" setting matches the motor model identified on the motor nameplate. The motor model code corresponding to the P00-01 number can be viewed through the servo upper control system
		3. Under vertical axis working conditions, excessive gravity load	1. Ensure that the value of "P0A-08" (brake open delay time) is less than "P0A-09"(brake open command reception delay time), and the difference is not less than 100ms 2. Reduce vertical axis load 3. Appropriately increase the rigidity level of P03-01
92	Over speed	1. Motor power line UVW connected incorrectly	Check the UVW wiring of the motor power line and correct any wiring errors
		2. Motor model setting error	Check if the "P0-01 motor model" setting matches the motor model identified on the motor nameplate. The motor model code corresponding to the P00-01 number can be viewed through the servo upper control system
		3. The over speed threshold is set too low	Check the value of "PB-16 overspeed determination threshold" to ensure that it is greater than the maximum motor speed required for actual operation

		4. The input command speed is too fast	Location operation mode 1. Reduce the input pulse command frequency while ensuring accurate final positioning 2. If the operating speed allows, increase the "P5-00 single turn pulse number" (when P5-00 is set to 0, the electronic gear ratio P5-01~P5-02 will be used to calculate the single turn pulse number) Speed operation mode 1. Ensure that the input speed command (P6-00~P6-03 setting) remains below the "PB-16 overspeed determination threshold" at all times 2. Reduce the 'P6-07 maximum speed limit' to below the 'PB-16 overspeed determination threshold'
		5. Torque operation mode without speed limitation	1. Set appropriate speed limits (P7-12~P7-14) to ensure that the torque mode speed limit value is less than the set value of "PB-16 overspeed judgment threshold" 2. Perform torque limitation (P7-04~P7-08 settings) to prevent excessive output torque
		6. Speed loop overshoot	operate gain adjustment, refer to gain adjustment for adjustment method
95	Driver over load	1. Abnormal wiring of motor power cable (motor cannot operate normally)	1. Check the UVW wiring of the motor power line and correct any wiring errors 2. Check for errors in connecting other shaft power lines or encoder lines
		2. Inappropriate gain adjustment or rigidity too strong (the motor cannot operate normally, or there is vibration during operation)	gain adjustment, refer to gain adjustment method
		3. The brake is not turned on (the motor cannot operate normally)	1. Check if the wiring of the brake is in accordance with the recommended wiring. It is not allowed to use servo IO for direct wired, and a relay needs to be added and use an external power source for driving 2. Check if the function configuration of the servo output terminal is correct. The default configuration is DO3 for brake output (P2-02 is set to 10) 3. Ensure that the value of "P0A-08" (brake open delay time) is less than "P0A-09"(brake open command reception delay time), and the difference is not less than 100ms 4. Remove the motor, connect the brake to the 24V power supply. If the motor shaft cannot be rotated, it indicates that the motor brake device is damaged and needs to be replaced

		4. The load is too heavy, and the drive has been working in an overloaded state for a long time	1. Increase the acceleration and deceleration time during operation 2. Reduce the frequency of acceleration and deceleration operation and increase the cycle of acceleration and deceleration operation 3. Replace high-power driver and matching motor 4. Reduce the load and, if conditions permit, purchase a gearbox 5. Set the parameter 'PB-05 overload alarm disable' to 2 to turn off the alarm (recommended for use only during debugging phase)
		5、Motor stalling caused by mechanical factors	1. When the mechanical load is light, disconnect the power and manually drag the machine to run. Check if there is strong resistance in certain positions and eliminate the resistance 2. When the load is heavy, disconnect the enable of the servo and use the jog function (F-002) to operate. Observe whether there are sudden deceleration points during operation, and troubleshoot and eliminate mechanical abnormalities
		6、Driver model setting error	Check if the "P11-00 Drive Model" matches the drive nameplate (the correspondence between numbers and model codes can be viewed in the upper software)
96	Motor over load	1. Abnormal wiring of motor power cable (motor cannot operate normally)	1. Check the UVW wiring of the motor power line and correct any wiring errors 2. Check for errors in connecting other shaft power lines or encoder lines
		2. Inappropriate gain adjustment or rigidity too strong (the motor cannot operate normally, or there is vibration during operation)	gain adjustment, refer to gain adjustment method
		3. The brake is not turned on (the motor cannot operate normally)	1. Check if the wiring of the brake is in accordance with the recommended wiring. It is not allowed to use servo IO for direct wired, and a relay needs to be added and use an external power source for driving 2. Check if the function configuration of the servo output terminal is correct. The default configuration is DO3 for brake output (P2-02 is set to 10) 3. Ensure that the value of "P0A-08" (brake open delay time) is less than "P0A-09"(brake open command reception delay time), and the difference is not less than 100ms 4. Remove the motor, connect the brake to the 24V power supply. If the motor shaft cannot be rotated, it indicates

			that the motor brake device is damaged and needs to be replaced
		4. The load is too heavy, and the drive has been working in an overloaded state for a long time	1. Increase the acceleration and deceleration time during operation 2. Reduce the frequency of acceleration and deceleration operation and increase the cycle of acceleration and deceleration operation 3. Replace high-power driver and matching motor 4. Reduce the load and, if conditions permit, purchase a gearbox 5. Set the parameter 'PB-05 overload alarm disable' to 2 to turn off the alarm (recommended for use only during debugging phase)
		5、Motor stalling caused by mechanical factors	1. When the mechanical load is light, disconnect the power and manually drag the machine to run. Check if there is strong resistance in certain positions and eliminate the resistance 2. When the load is heavy, disconnect the enable of the servo and use the jog function (F-002) to operate. Observe whether there are sudden deceleration points during operation, and troubleshoot and eliminate mechanical abnormalities
97		6、Driver model setting error	Check if the "P11-00 Drive Model" matches the drive nameplate (the correspondence between numbers and model codes can be viewed in the upper software)
98	Motor overload warning	The load is too heavy, and the motor works in an overloaded state for a long time	1.Increase the acceleration and deceleration time during operation 2. Reduce the frequency of acceleration and deceleration operation and increase the cycle of acceleration and deceleration operation 3. Replace high-power motor and matching driver 4. Reduce the load and, if conditions permit, purchase a gearbox 5. Set the parameter 'PB-05 overload alarm disable' to 1 to turn off the alarm (recommended for use only during debugging phase)

99	Motor stalling	1. Wiring error	1. Check if the motor power line UVW is connected incorrectly or not connected 2. Check for errors in connecting other shaft power lines and encoder lines
		2. The brake is not turned on (the motor cannot operate normally)	1、Check if the brake wiring is in accordance with the recommended wiring. It is not allowed to use servo IO directly for driving, and a relay needs to be added to use an external power source for driving 2. Check if the function configuration of the servo output terminal is correct. The default configuration is DO3 for brake output (P2-02 is set to 10) 3、Ensure that the value of "P0A-08" (brake open delay time) is less than "P0A-09"(brake open command reception delay time), and the difference is not less than 100ms 4、Remove the motor, connect the brake to the 24V power supply. If the motor shaft cannot be rotated, it indicates that the motor brake device is damaged and needs to be replaced
		3、Motor stalling caused by mechanical factors	1. When the mechanical load is light, disconnect the power and manually drag the machine to run. Check if there is strong resistance in certain positions and eliminate the resistance 2. When the load is heavy, disconnect the enable of the servo and use the jog function (F-002) to operate. Observe whether there are sudden deceleration points during operation, and troubleshoot and eliminate mechanical abnormalities
100	The servo ON command is invalid	Input servo ON signal during internal enable	Do not use IO or bus enabled servo during jogging, self-tuning, and angle recognition
101	Excessive positional deviation	1. Wiring error	1. Check if the motor power line UVW is connected incorrectly or not connected 2. Check for errors in connecting other shaft power lines and encoder lines
		2. Motor stalling caused by mechanical factors	1. When the mechanical load is light, disconnect the power and manually drag the machine to run. Check if there is strong resistance in certain positions and eliminate the resistance 2. When the load is heavy, disconnect the enable of the servo and use the jog function (F-002) to operate. Observe whether there are sudden deceleration points during operation, and troubleshoot and eliminate mechanical abnormalities

		3. The brake is not turned on (the motor cannot operate normally)	1、Check if the brake wiring is in accordance with the recommended wiring. It is not allowed to use servo IO directly for driving, and a relay needs to be added to use an external power source for driving 2. Check if the function configuration of the servo output terminal is correct. The default configuration is DO3 for brake output (P2-02 is set to 10) 3、Ensure that the value of "P0A-08" (brake open delay time) is less than "P0A-09"(brake open command reception delay time), and the difference is not less than 100ms 4、Remove the motor, connect the brake to the 24V power supply. If the motor shaft cannot be rotated, it indicates that the motor brake device is damaged and needs to be replaced
		poor tracking performance due to the Inappropriate servo gain	1、Perform gain adjustment, refer to gain adjustment for adjustment method 2、Reduce the frequency of position commands or increase the "P5-00 single cycle pulse count" 3、Increase the torque limit value and set it through P7-04~P7-08 4、According to the actual system requirements, increase the "PB-12 position deviation too large fault threshold" appropriately
102	Abnormal position command input	1. Input pulse frequency too high	Ensure that the input command pulse frequency is not greater than the "maximum pulse input frequency at PB-11 position"
		2. The input pulse is disturbed	1. The pulse input cable adopts twisted pair shielded wire and is separately wired from the driver power line 2. Increase the "P5-18 pulse signal filtering time" and "P5-19 direction signal input filtering time"
105	Frequency division pulse output overspeed	Frequency division output frequency greater than servo output capability	1. Set a smaller "P5-30 pulse output single-phase pulse number" 2. Reduce the maximum speed of servo operation 3. Increase the single-phase maximum frequency of P5-29 pulse output
106	Accumulated overflow of frequency divided pulses	Frequency division output, delayed output pulse too large	1. Set a smaller "P5-30 pulse output single-phase pulse number" 2. Reduce the average speed of servo operation 3. Increase the single-phase maximum frequency of P5-29 pulse output
107	Unreasonable setting of frequency division pulse output	Unreasonable setting of frequency division output parameters	1. Increase the maximum frequency of the encoder's frequency division output 2. Reduce the number of pulses per cycle output by the encoder's frequency division

108	Zero return timeout error	Origin switch malfunction	1. Ensure that the origin switch is correctly connected 2. Ensure that the origin switch is working properly, adjust sensitivity correctly, and prevent it from being in a constant ON or OFF state 3. Ensure that the origin switch is positioned between the limit switches
		Input terminal configuration error	1. Check the configuration of the P01 parameter input terminal to see if the terminal function was incorrectly configured as "[32] Origin Regression Trigger Signal", but the function "[31] Origin Signal" was not assigned to the input terminal 2. Check that the P01 group has been assigned the input terminal for the "[31] origin signal" and wired according to the correct logic to ensure the correctness of the terminal logic selection. The default is "low effective (ON)"
		Improper configuration of the reset function	1. Check if the zeroing direction set in the "P5-41 Origin Reset Mode" is consistent with the actual forward and reverse directions of operation (the "P0-02 Motor Rotation Positive Direction Definition" can modify the forward direction of motor rotation selection) 2. Increase the 'P5-45 origin search time' 3. Increase the "P5-42 origin high-speed search speed" to ensure that the time required to search for the origin using this speed at all zero return positions is not greater than the "P5-45 origin search time"
109	Overload of braking resistor	1. Braking resistor not connected	1. When using the built-in braking resistor, ensure that the P and D terminals in the power terminal are short circuited (400w and below drivers do not include the built-in braking resistor) 2. When using an external braking resistor, ensure that it is correctly connected to the power terminals P and C
		2. Brake resistor damaged	After the servo is powered off, measure the resistance between the power terminals P and C to see if it is ∞. If so, replace the braking resistor. If the current one is using an internal braking resistor (with P and D short circuited in the power terminals), consider disconnecting the P and D connections and using a compliant external braking resistor (please select the braking resistor according to the braking resistor selection instructions) to connect to the power terminals P and C
		3. Incorrect brake parameter configuration	According to actual usage, correctly configure parameters P0-05~P0-07
		4. The resistance of the braking resistor is too high	Select the braking resistor according to the selection instructions, and after replacement, configure parameters P0-05~P0-07 correctly based on actual usage

		5. Supply voltage too high	Check the input power specifications of the driver and measure whether the input voltage on the non driver side and driver side (L1 L2 L3) of the main circuit cable meets the following specifications: 220V driver Effective value: 220V-240V Allowable deviation: -10%~+10% (198V~264V) 380V driver Effective value: 380V-440V Allowable deviation: -10%~+10% (342V~484V)
		6、急减速时回流能量过大	1. Increase the deceleration time during operation 2. Increase the operating cycle and reduce the proportion of deceleration period time 2. Choose a high-power external brake resistor, select the brake resistor according to the brake resistor selection instructions, replace it according to the actual usage situation, and correctly configure parameters P0-05~P0-07 3. Reduce the load and, if conditions permit, purchase a gearbox 4. Replace high-power driver
111	The resistance value of the external braking resistor is too small	The resistance value of the external braking resistor is too small	1. Ensure that the parameter 'P0-07 external regeneration resistor resistance value' is configured correctly 2. Replace with an external regeneration resistor with a higher resistance value, ensuring that its value is greater than the "P11-47 Driver Allowable Minimum Regeneration Resistance"
112	Motor power line broken	Motor power line broken	1. Check if the motor power line is connected 2. Check if the motor power cable is in good condition
113	Restart prompt	The parameters that need to be restarted to take effect have been modified	1. Power off and restart the servo 2. Disconnect servo enable, write function code F-000 1, restart servo
114	Forward over travel warning	Positive over travel signal takes effect	1. When no forward overtravel signal is required, confirm that no DI input terminal is configured as a forward overtravel signal (signal code 14). The default DI3 configuration is for this function (P1-06 is configured as 14) 2. Confirm that the input logic of the DI terminal configured as a forward overtravel signal is correct. The default DI3 configuration is set to this function (P1-06 is set to 14), and the default effective logic is set to be effective when the input is ON (P1-22 is set to 0) 3. Check if the wiring and proximity switch installation are correct. The input DI signal can be observed through O-29, and DI3 is set to this function by default (P1-06 is

			configured as 14). Change the input switch signal and observe if the third digit of the O-29 binary number changes to determine the correctness of the wiring and input switch signal 4. Under the condition of confirming safety, give a reverse command or rotate the motor in the reverse direction to make the machine run to the position where the forward limit switch has not been triggered (the alarm will be automatically cleared after leaving the limit switch)
115	Reverse over travel warning	Reverse over travel signal takes effect	1、 When no reverse overtravel signal is required, confirm that no DI input terminal is configured as a reverse overtravel signal (signal code 15). The default DI4 configuration is for this function (P1-07 is configured as 15) 2、Confirm that the input logic of the DI terminal configured as a reverse overtravel signal is correct. The default DI4 configuration is set to this function (P1-07 is set to 15), and the default effective logic is set to be effective when the input is ON (P1-23 is set to 0) 3、Check if the wiring and proximity switch installation are correct. The input DI signal can be observed through O-29, with DI4 set to this function by default (P1-07 configured as 15). Change the input switch signal and observe if the 4th bit of the O-29 binary number changes to determine the correctness of the wiring and input switch signal 4、Under the condition of confirming safety, give a reverse command or rotate the motor in the positive direction to make the machine run to the position where the reverse limit switch has not been triggered (the alarm will be automatically cleared after leaving the limit switch)
117	AI1 input too large	1、The input voltage of analog input channel AI1 is too high	Ensure that the voltage input of analog channel AI1 is not greater than 10V, and AI1 is input by AI1+(32) and AI1-(17) of control terminal CN1
		2、Unreasonable zero drift setting	Check if the value of parameter "P8-06 AI1 zero drift" is unreasonable. The default zero drift is 0V
118	AI2 input too large	1、The input voltage of analog input channel AI2 is too high	Ensure that the voltage input of analog channel AI2 is not greater than 10V, and AI2 is input by AI2+(18) and AI2-(19) of control terminal CN1
		2、Unreasonable zero drift setting	Check if the value of parameter "P8-11 AI2 zero drift" is unreasonable. The default zero drift is 0V
120	AI1 zeroing failed	AI1 zero adjustment analog input is not 0V	Ensure that when the servo is powered on or when using analog voltage zeroing F-005, the AI1 analog input is 0, and AI1 is input by AI1+(32) and AI1- (17) of control terminal CN1

121	AI2 zeroing failed	AI2 zero adjustment analog input is not 0V	When the servo is powered on or when using analog voltage zeroing F-005, the analog input of AI2 is 0, and AI2 is input by AI2+(18) and AI2- (19) of control terminal CN1
125	Command pulse wiring error	1. Pulse input signal type configuration error	1. Check if the configuration of the "P5-16 instruction pulse shape" matches the actual input signal type. When using AB phase 4 times harmonic input, please set P5-16 to 1 2. Increase the value of PB-21 and set it to 65535 to turn off the alarm
		2. Command pulse signal wiring error	Check if the command signal and pulse signal are connected in reverse, and if the pulse signal line is connected properly
126	Direction of signal interference	During operation, the directional signal is disturbed, resulting in a correctable error in pulse counting	1、Increase the "P5-19 direction signal input filtering time" 2、Improve the quality of directional signal 3、Set a larger 'PB-19 SIGN signal disturbance warning threshold' 4、When the PB-19 value is low, please ensure that the pulse output controller does not perform power on/off operations when the servo is turned on 5、Increase the value of PB-19 and set it to 65535 to turn off the warning
127	Direction signal interference error	During operation, the directional signal was disturbed and the pulse counting has a serious error	1、. Increase the "P5-19 direction signal input filtering time" 2、 Improve the quality of directional signal 3、3Set a larger 'PB-20 SIGN signal disturbance error threshold' 4、 When the PB-20 value is small, please ensure that the pulse output controller does not perform power on/off operations when the servo is turned on 5、Increase the value of PB-20 and set it to 65535 to turn off the alarm
177	Position ring execution timeout warning	When the position loop is executed twice in a row and the execution cycle is too long	1、Replace the drive 2、Contact our technical team for processing
180	Modbus receive cache overflow	When the data received by Modbus is greater than the maximum data that can be processed, a warning will be issued	1. Ensure that the 485 communication cable is wired properly. 2. Ensure that the communication station number and baud rate of 485 are set correctly 3. Ensure that there are no erroneous nodes occupying communication resources on the communication line

190	Continuous sampling data with frame loss	When using a virtual oscilloscope, the amount of data is too large, or the communication cable is unplugged during sampling	1. Alarm, does not affect normal use, only serves as a prompt when using a virtual oscilloscope
191	Multiple positions trigger anomalies	When multiple segment positions are being executed, triggering DI multiple segment positions again will generate AL.191 alarm	1. Avoid triggering again while executing at multiple locations 2. P0B-31 parameter set to 1 to shield the alarm

7 Modbus communication

7.1 Hardware wiring and parameter configuration

The R8 series driver has a MODBUS communication function with RS-485 interface, which can be used to modify parameters and monitor the status of servo drives. The definition of servo drive terminals is shown in the chart in section 3.2.7. It is recommended to use twisted pair shielded cables for 485 communication lines, which require the connection of a 120 ohm terminal resistor. When there are a large number of servo drive nodes, it is recommended to use a hand-in-hand bus structure for the 485 bus.

When using RS485 serial communication, the upper controller communicates with the corresponding servo drive at the set communication baud rate based on the station number, and the communication adopts RTU (Remote Terminal Unit) mode.

7.2 Modbus protocol

The function code of the servo drive is divided into 16 bit and 32-bit according to the data length. The MODBUS RTU protocol can be used to read and write data to the function code. When writing function code data, the command code varies according to the different data lengths.

RTU protocol:

Each 8-bit data is composed of two 4-bit hexadecimal characters, for example: 1-byte data 64H. Each character is set to 8 data bits, 1 or 2 stop bits, with or without odd/even check bits. The communication data structure is shown in the following table：

Start	The minimum time interval from the previous frame is 3.5 characters
Slave Address	Communicate address：1byte
Function	Function code：1byte
Data（n-1）	Data massage：n word =2n byte，n<=8
……	
Data（0 ）	

CRC	Verification code：2byte
End 1	The minimum time interval between the next frame is 3.5 characters

signal and ends with another stationary signal. Between the beginning and end, there are communication address, function code, data content, and Cyclical Redundancy Check (CRC) in sequence.

The functions currently supported by MSA servo are shown in the table below.

Code	Function
0x03	Read 16/32-bit function code
0x06	Write a 16 digit function code
0x10	Write a 32-bit function code

Taking the reading function code 0x03 and writing function code 0x06 as examples, briefly explain the command information of the MODBUS master station and the response information of the servo drive slave station. The remaining function code commands and response information comply with the Modbus standard.

Reading function: Function code 03H, read 16 bit and 32-bit function codes：

Master command frame：

Slave Address	Slave station（1~247） ◆Note: Here 1~247 are decimal numbers, converted to hexadecimal numbers when filling in ADDR.
Function	Code ： 0x03
Starting data location	DATA[0]： The starting function code group number, such as function code P0312, 03, is the group number. ◆Note: Here, 03 is a hexadecimal number, and there is no need for conversion when entering DATA [0]

	DATA[1]：The offset within the starting function code group, such as function code P0312, 12 is the offset。 ◆Note: Here, 12 is a decimal number. When filling in DATA [1], it should be converted to hexadecimal 0x0C
Data bit	DATA[2]：Read the number of function codes (8 digits high) in hexadecimal format
	DATA[3]：Read the number of function codes (8 digits low) in hexadecimal format
CRC Check Low	CRC Verify valid bytes (low 8 bits)
CRC Check High	CRC Verify valid bytes (high 8 bits)

Slave response frame：

Slave Address	Slave station（1~247） ◆Note: Here 1-247 are decimal numbers, converted to hexadecimal numbers when filling in ADDR
Function	Code ：0x03
Data bit（Calculated in bytes）	The number of bytes of the function code is equal to the number of read function codes N*2
Starting data address content	DATA[0]：Starting function code value, 8 bits high
	DATA[1] ：Starting function code value, 8 bits low
Subsequent data	DATA[...]
	DATA[N*2-1]：Last function code value, low 8 bits
CRC Check Low	CRC Verify low significant bytes
CRC Check High	CRC Verify high significant bytes

In the MODBUS RTU protocol, the command code 0x06 is used to write 16 bit function codes; Write 32-bit function code using command code: 0x10.

Write function: Function code 06H, write a single word (16 bit data):

Master command frame：

Slave Address	Slave station（1~247） ◆Note: Here 1~247 are decimal numbers, converted to hexadecimal numbers when filling in ADDR.

Function	Code ： 0x06
Starting data location	DATA[0]： The starting function code group number, such as function code P0312, 03, is the group number. ◆Note: Here, 03 is a hexadecimal number, and there is no need for conversion when entering DATA [0]
	DATA[1]： The offset within the starting function code group, such as function code P0312, 12 is the offset。 ◆Note: Here, 12 is a decimal number. When filling in DATA [1], it should be converted to hexadecimal 0x0C
Data content	DATA[2]： Read the number of function codes (8 digits high) in hexadecimal format
	DATA[3]： Read the number of function codes (8 digits low) in hexadecimal format
CRC Check Low	CRC Verify valid bytes (low 8 bits)
CRC Check High	CRC Verify valid bytes (high 8 bits)

Slave response frame:

Slave Address	Slave station（1~247） ◆Note: Here 1~247 are decimal numbers, converted to hexadecimal numbers when filling in ADDR.
Function	code： 0x06
Starting data location	Write the function code group number, such as writing function code P0312, which is 0x03
	If the written function code is offset, such as writing function code P0312, it will be 0x0C
Data content	Write high byte data in hexadecimal format
	Write low byte data in hexadecimal format
CRC Check Low	CRC check low valid byte
CRC Check High	CRC check highly valid byte

Write function: Function code 10H, write double words (32-bit data):

Master command frame：

Slave Address	Slave station（1~247） ◆Note: Here 1~247 are decimal numbers, converted to hexadecimal numbers when filling in ADDR.

Function	code：0x06
Starting data location	DATA [0]: The starting function code group number, such as function code P0530, where 05 is the group number. ◆Note: Here, 05 is a hexadecimal number, and there is no need for conversion when filling in DATA [0]
	DATA [1]: offset within the starting function code group, such as function code P0530, where 30 is the offset. ◆Note: Here, 30 is a decimal number. When filling in DATA [1], it should be converted to hexadecimal 0x1E
Data content	DATA [2]: The number of function codes 8 bits high M(H). 32-bit function codes are counted as 2. For example, if P0530 is written alone, DATA [2] is 00, DATA [3] is 02, and M=H0002.
	DATA[3]：The number of function codes 8 bits low M(L)
	DATA [4]: The number of function codes corresponds to a byte count of M * 2.。 For example, if P0530 is written alone, DATA [4] is H04.
	DATA[5]：Write into the starting function code 8 bits high in hexadecimal format
	DATA[6]：Write into the starting function code 8 bits low in hexadecimal format
	DATA[7]：Write the high 8 bits,offset+1 in the starting function code group, in hexadecimal format
	DATA[8]：Write the low 8 bits,offset+1 in the starting function code group, in hexadecimal format
CRC Check Low	CRC CRC check valid bytes (low 8 bits)
CRC Check High	CRC check valid bytes (high 8 bits)

Slave response frame:

Slave Address	Slave station（1~247） ◆Note: Here 1~247 are decimal numbers, converted to hexadecimal numbers when filling in ADDR.
Function	code：0x010
Starting data location	Write the function code group number, such as writing function code P0530, which is 0x05

	Write function code offset, such as writing function code P0530, which is 0x1E
Data content	The number of written function codes is 8 bits high
	The number of written function codes is 8 bits low
CRC Check Low	CRC check low valid byte
CRC Check High	CRC check high valid byte

Error frame function code：

Slave Address	Slave （1~247） ◆Note: Here 1~247 are decimal numbers, converted to hexadecimal numbers when filling in ADDR.
Function	code
Starting data location	DATA[0]：0x80
	DATA[1]：0x01
Data content	DATA[2]：Error code high 8 bits
	DATA[3]：Error code low 8 bits
CRC Check Low	CRC check low valid byte
CRC Check High	CRC check high valid byte

Error code ：

Error code	**description**
0x0001	Illegal command code
0x0002	Illegal data address
0x0003	Illegal data
0x0004	Slave device fault

Function code (parameter number) addressing (16 bit address)::

When we receive a set of parameter numbers and need to use HMI, PLC and other equipment tools to read or write servo drive parameters, we first need to know their addresses. The following is the correspondence between parameter numbers and their addresses.

Firstly, it should be noted that only parameters starting with "P" have a clear relationship with the address.

The structure of R8 servo parameter code is consisting of "P" and 4 digits, such as P0005. The corresponding address relationship is that the first two digits are in hexadecimal form as high 8 bits address, and the last

two digits are in decimal form as low 8 bits address, forming a total of 16 bits of the address. For example:

Parameter P0516: Command pulse form, corresponding to address 0x510 or 1296.

Parameter P1321: Bus voltage, corresponding to address 0x1315 or 4885.

Parameter P0C04: Position instruction type selection, corresponding to address 0x0C04 or 3076.

The specific parameter corresponds to the numerical range and rules written in Chapter 6 Parameter List.

Examples of Communication：

1）Host sends request frame

01	03	01	04	00	01	CRCL	CRCH

The request frame indicates that：the slave station axis is 01,
The function code P0104 of the driver reads 0x0001 word length data (i.e. 16 bit data) from the starting register.

Slave station response feedback frame：

01	03	02	00	01	CRCL	CRCH

This response frame indicates that the slave machine returns data of 1 word length (i.e. 2 bytes) with a content of 0x0001.

If Slave station response feedback frame as this：

01	03	80	01	00	02	CRCL	CRCH

This response frame indicates: Communication error occurred, with error code 0x0002; 0x8001 indicates an error.

2）Host sends request frame

01	06	01	04	00	01	CRCL	CRCH

This request frame indicates writing 0x0001 to function code P0104 of drive with axis address 01。

slave station response feedback frame：

01	06	01	04	00	01	CRCL	CRCH

This response frame indicates:write successful.

If slave station response feedback frame：

01	06	80	01	00	02	CRCL	CRCH

This response frame indicates: Communication error occurred, with error code 0x0002; 0x8001 indicates an error.

Modbus communication parameters are not written to EEPROM

Adding 1 to the highest bit of the write parameter (when the highest bit is 1, the address is 0x8000) can prevent information from being stored in the EEPROM during Modbus writing. For example, when writing parameter P5-40 with an address of 0x528, if the communication address is 0x528, the information will also be stored in the EEPROM after communication writing. At this time, the communication address calculation method is 0x8000+0x528=0x8528. After communication writing, the information will not be stored in the EEPROM, which can effectively protect the EEPROM from damage caused by continuous writing.

CRC calculation in RTU mode:

The CRC value calculation steps are as follows:

Step 1: Load a 16 bit register with FFFF H content, called the "CRC" register.

Step 2: XOR the first bit (bit0) of the instruction message with the low bit (LSB) of the 16 bit CRC register, and store the result back into the CRC register;

Step 3: Check the least significant bit (LSB) of the CRC register. If this bit is 0, shift the CRC register value to the right by one bit; If this bit is 1, the CRC register value is shifted to the right by one bit and then XOR with A001 H;

Step 4: Return to step 3 until step 3 has been executed 8 times before proceeding to step 5;

Step 5: Repeat steps 2 to 4 for the next bit of the instruction message until

all bits have been processed in this way. At this point, the content of the CRC register is the CRC error detection value.

example：

Generate CRC values in C language below. This function requires two parameters:

unsigned char * data;

unsigned char length;

This function will return an unsigned integer CRC value。

```
unsigned int crc_chk(unsigned char * data,unsigned char length)
{
    int i,j;
    unsigned int crc_reg=oxFFFF;
    While(length--)
    {
        crc_ reg ^=*data++;
        for(j=0;j<8;j++)
        {
            If(crc_reg & 0x01)
            {
                crc_reg=( crc_reg >>1)^0xA001;
            }else
            {
                crc_reg＝crc_reg >>1;
            }
        }
    }
    return crc_reg;
}
```

8 User Parameters

Code group	Group description
P00	Servo basic parameter group
P01	IO input parameter group
P02	IO output parameter group
P03	Gain adjustment parameter group
P05	Position control parameter group
P06	Speed control parameter group
P07	Torque control parameter group
P08	Analog parameter group
P09	Communication Control Parameter Group
P0A	Stop control parameter group
P0B	Fault and protection parameter group
P0C	Multi segment position control parameter group
P0D	Multi stage speed control parameter group
P0E	Adaptive adjustment parameter group
P10	Motor parameter group
P11	Driver parameter group
P12	Auxiliary function parameter group
P13	Monitoring parameter group
P14	Fully closed-loop control parameter group
P15	Virtual IO parameter group
P16	Version information parameter group
P1B	System Information Parameter Group
P2D	Communication status parameter group
P2E	Motion control parameter group

8.1 P00 Servo basic parameter group

Code	Name	Set range	unit	value	Effective mode	Set method	Set mode
P00-00	Mode selection	0-position mode 1-Speed mode 2-Torque mode 3-Position and speed mixed mode 4-position and torque hybrid mode 5-speed and torque hybrid mode 6-Mixed mode of position, speed, and torque 7- Reserved 8-EtherCAT bus mode	--	0	Effective immediately	Stop setting	Ordinary users
P00-01	Motor mode	0-40HK_A00330 1-60HK_A00630 2- 60HK_A01330 3- 60HK_A01930 4- 80HK_A02430 5- 80HK_A03230 6-80HK_A03825 7-130HK_A04830 8-130HK_A07220 9-130HK_A09620 10-180HK_A19015 11-180HK_A28015 12-180HK_A35015 13-180HK_A48015 100-80ZK_A02430 101-80ZK_B02430 102-60ZK_A01330 103-60ZK_A01330_B	--	6	Stop and restart	Stop setting	Ordinary users
P00-02	Definition of forward direction of motor rotation	0-CCW (counterclockwise) direction is the forward direction 1-CW (clockwise) direction is the forward direction	--	0	Stop and restart	Stop setting	Ordinary users

Code	Name	Set range	unit	value	Effective mode	Set method	Set mode
P00-03	Absolute position detection system	0-incremental position mode 1- Absolute position linear mode 2- Absolute position rotation mode	--	0	Stop and restart	Stop setting	Ordinary users
P00-04	Save current location when power failure	0- no save current location when power failure 1. Save current location when power failure	--	0	Effective immediately	Set anytime	Ordinary users
P00-05	Selection of Resistors	0- Use built-in regenerative resistor 1. Use an external regenerative resistor 2. Use an external regeneration resistor and cool it down with a fan 3- Do not use regenerative resistors	--	0	Effective immediately	Stop setting	Ordinary users
P00-06	External regenerative resistor power	1~65535	W	40	Effective immediately	Stop setting	Ordinary users
P00-07	External regeneration resistor resistance value	1~1000	Ω	50	Effective immediately	Stop setting	Ordinary users
P00-08	Default monitoring parameters for the tube	-1~32767	--	-1	Effective immediately	Set anytime	Ordinary users
P00-10	Speed display filtering time	0~5000	ms	50	Effective immediately	Stop setting	Ordinary users
P00-12	User password	0~65535	--	0	Effective immediately	Set anytime	Ordinary users

Code	Name	Set range	unit	value	Effective mode	Set method	Set mode
P00-14	Manufacturer password	0~65535	--	0	Effective immediately	Set anytime	Ordinary users
P00-15	Power outage, rapid discharge, and disable	0-Enable power-off and rapid discharge function 1.Disable power-off and rapid discharge function	--	0	Effective immediately	Set anytime	Ordinary users
P00-16	Enable user password communication settings	0-No communication allowed Set user password 1. Allow communication to set user passwords	--	1	Effective immediately	Set anytime	Ordinary users
P00-20	Motor model writing mode	0-Prohibited writing mode 1-Intelligent write mode 2-Forced write mode 3-Eraser Mode		0	Restart to take effect	Set anytime	Panel operation
P00-21	Servo internal enable	0-Enable to be determined by Ethercat or IO input status 1-Servo always enabled 2-Servo always enabled, reset to zero when malfunction 3-Servo always disable		0	Effective immediately	Set anytime	Ordinary users
P00-22	Motor torque increase	0~1		0	Restart to take effect	Set anytime	Panel operation
P00-23	Parameter backup function enabled	0~1		0	Restart to take effect	Set anytime	Panel operation

Code	Name	Set range	unit	value	Effective mode	Set method	Set mode
P00-24	shutdown encoder EEPROM access mode	0-no read parameters from the motor encoder 1-Read the motor ID from the motor encoder and identify the motor through the motor ID		0	Restart to take effect	Set anytime	Ordinary users
P00-25	Turn off AL011 alarm	0-AL011 alarm not blocked 1-Turn off the Al.011 (parameter verification abnormal) alarm, and after the alarm occurs, ensure that this function is enabled only when the modified parameters are correct		0	Stop and restart	Set anytime	Ordinary users
P00-26	Turn off AL.13 alarm	0-AL013 alarm not blocked 1-Close the Al.013 (parameter verification abnormal) alarm		0	Restart to take effect	Set anytime	Ordinary users
P00-27	Is the running time written into EEPROM	0~1		0	Restart to take effect	Set anytime	Ordinary users
P00-29	Alarm shielding 0	0~65535		0	Restart to take effect	Set anytime	Ordinary users
P00-30	Alarm shielding 1	0~65535		0	Restart to take effect	Set anytime	Ordinary users

8.2 P01 IO input parameter group

Code	Name	Set range	unit	value	Effective mode	Set method	Set mode
P01-00	Input signal not assigned default state	0~65535 (hexadecimal) 0~15 digit setting meaning: 0- servo enable, 1- fault reset 2- gain switch, 3- command switch 4- command direction switch 5- Internal command switch 0 6- Internal command switch 1 7- Internal command switch 2 8- Internal command switch 3 9- Operating mode switch 0 10- Operating Mode switch 1 11 -zero clamp, 12- pulse disable 13- Prohibit forward rotation, 14- Prohibit reverse rotation 15- Forward external torque limit	--	0	Stop and restart	Set anytime	Ordinary users

Code	Name	Set range	unit	value	Effective mode	Set method	Set mode
P01-01	Input signal not assigned default state	0~65535 (hexadecimal) 0~15 digit setting meaning: 0- Reverse external torque limit 1- jog forward rotation 2- jog reversal 3 -reserved, 4- reserved, 5-reserved, 6 -reserved 7 -electronic gear switch 8- torque command direction 9- Speed command direction 10- position command direction 11- Enable multi segment position operation 12- Cancel interrupt fixed length action 13- Reserved 14 origin signal 15- Origin Regression Trigger Signal	--	0	Stop and restart	Set anytime	Ordinary users
P01-02	Input signal not assigned default state	0~127 (hexadecimal) 0~6 digit setting meaning: 0 -interrupt fixed length prohibition 1- Emergency Stop 2- Position deviation clearing 3- Speed Limit Selection 4 pulse command prohibited 5- probe 1 6 -probe 2	--	0	Stop and restart	Set anytime	Ordinary users
P01-03	Input signal not assigned default state	reverse	--	0	Stop and restart	Set anytime	Ordinary users

Code	Name	Set range	unit	value	Effective mode	Set method	Set mode
P01-04	DI1 terminal function selection	0- No allocation 1-Servo Enable 2- Fault reset 3-Gain switch 4-command switch 5-command direction switch 6- Internal command switch 0 7-Internal command switch 1 8-Internal command switch 2 9-Internal command switch 3 10 -Operation mode switch 0 11- Operation mode switch 1 12- Zero Clamp 13- Pulse prohibition 14- Prohibition of forward 15- prohibition of reverse 16- switch of external torque limit for forward rotation 17- switch of external torque limit for reverse rotation 18- jog forward rotation 19- Jog reverse rotation 20- Reserved, 21- Reserved, 22- Reserved, 23- Reserved 24- Electronic gear switch 25- Direction of torque command 26- Speed command direction 27- Position Command Direction 28- Enable multi position operation 29- Cancel interrupt fixed length action 30-when P05-40=1, set the current position as the origin through DI30, and return to the set electrical zero point by triggering DI32 31- Origin signal 32- Origin regression trigger signal 33- Interruption fixed length prohibition 34- Emergency stop 35- Clearance of Position Deviation 36- Speed limit selection 37- Pulse command prohibited 38- Probe 1 39- Probe 2	--	1	Effective immediately	Stop setting	Ordinary users

Code	Name	Set range	unit	value	Effective mode	Set method	Set mode
P01-05	DI2 terminal function selection	0- No allocation 1-Servo Enable 2- Fault reset 3-Gain switch 4-command switch 5-command direction switch 6- Internal command switch 0 7-Internal command switch 1 8-Internal command switch 2 9-Internal command switch 3 10 Operation mode switch 0 11- Operation mode switch 1 12 Zero Clamp 13- Pulse prohibition 14- Prohibition of forward 15- Prohibition of reverse 16- switch of external torque limit for forward rotation 17- switch of external torque limit for reverse rotation 18 -jog forward 19- Jog reverse 20- Reserved 21- Reserved 22- Reserved 23- Reserved 24- Electronic gear switch 25- Direction of torque command 26- Speed command direction 27- Position Command Direction 28- Enable multi position operation 29- Cancel interrupt fixed length action 30- when P05-40=1, set the current position as the origin through DI30, and return to the set electrical zero point by triggering DI32 31- Origin signal 32- Origin regression trigger signal 33- Interruption fixed length prohibition 34- Emergency stop 35- Clearance of Position Deviation 36- Speed limit selection 37 -Pulse command prohibited 38- Probe 1 39 -Probe 2	--	2	Effective immediately	Stop setting	Ordinary users

Code	Name	Set range	unit	value	Effective mode	Set method	Set mode
P01-06	DI3 terminal function selection	0- No allocation 1-Servo Enable 2- Fault reset 3-Gain switch 4-command switch 5-command direction switch 6- Internal command switch 0 7-Internal command switch 1 8-Internal command switch 2 9-Internal command switch 3 10 Operation mode switch 0 11- Operation mode switch 1 12 Zero Clamp 13- Pulse prohibition 14- Prohibition of forward 15- Prohibition of reverse 16- switch of external torque limit for forward rotation 17- switch of external torque limit for reverse rotation 18 -jog forward 19- Jog reverse 20- Reserved, 21- Reserved, 22- Reserved, 23- Reserved 24- Electronic gear switch 25- Direction of torque command 26- Speed command direction 27- Position Command Direction 28- Enable multi position operation 29- Cancel interrupt fixed length action 30- when P05-40=1, set the current position as the origin through DI30, and return to the set electrical zero point by triggering DI32 31- Origin signal 32- Origin regression trigger signal 33- Interruption fixed length prohibition 34- Emergency stop 35- Clearance of Position Deviation 36- Speed limit selection 37 -Pulse command prohibited 38 -Probe 1 39- Probe 2	--	14	Effective immediately	Stop setting	Ordinary users

Code	Name	Set range	unit	value	Effective mode	Set method	Set mode
P01-07	DI4 terminal function selection	0- No allocation 1-Servo Enable 2- Fault reset 3-Gain switch 4-command switch 5-command direction switch 6- Internal command switch 0 7-Internal command switch 1 8-Internal command switch 2 9-Internal command switch 3 10 Operation mode switch 0 11- Operation mode switch 1 12 Zero Clamp 13- Pulse prohibition 14- Prohibition of forward 15- Prohibition of reverse 16- switch of external torque limit for forward rotation 17- switch of external torque limit for reverse rotation 18 -jog forward 19- Jog reverse 20- Reserved, 21- Reserved, 22- Reserved, 23- Reserved 24- Electronic gear switch 25- Direction of torque command 26- Speed command direction 27- Position Command Direction 28- Enable multi position operation 29- Cancel interrupt fixed length action 30- when P05-40=1, set the current position as the origin through DI30, and return to the set electrical zero point by triggering DI32 31- Origin signal 32- Origin regression trigger signal 33- Interruption fixed length prohibition 34- Emergency stop 35- Clearance of Position Deviation 36- Speed limit selection 37 -Pulse command prohibited 38- Probe 1 39- Probe 2	--	15	Effective immediately	Stop setting	Ordinary users

Code	Name	Set range	unit	value	Effective mode	Set method	Set mode
P01-20	DI1 terminal logic selection	0-Low effective (ON) 1. High effective (OFF) 2- Effective rising edge (ON ->OFF) 3- Effective falling edge (OFF ->ON) 4-Edge effective (ON<->OFF)	--	0	Effective immediately	Stop setting	Ordinary users
P01-21	DI2 terminal logic selection	0-Low effective (ON) 1. High effective (OFF) 2- Effective rising edge (ON ->OFF) 3- Effective falling edge (OFF ->ON) 4-Edge effective (ON<->OFF)	--	0	Effective immediately	Stop setting	Ordinary users
P01-22	DI3 terminal logic selection	0-Low effective (ON) 1. High effective (OFF) 2- Effective rising edge (ON ->OFF) 3- Effective falling edge (OFF ->ON) 4-Edge effective (ON<->OFF)	--	0	Effective immediately	Stop setting	Ordinary users
P01-23	DI4 terminal logic selection	0-Low effective (ON) 1. High effective (OFF) 2- Effective rising edge (ON ->OFF) 3- Effective falling edge (OFF ->ON) 4-Edge effective (ON<->OFF)	--	0	Effective immediately	Stop setting	Ordinary users
P01-43	Digital input filtering time	0~32		0	Restart to take effect	Stop setting	Ordinary users

8.3 P02 IO output parameter group

Code	Name	Set range	unit	value	Effective mode	Set method	Set mode
P02-00	DO1 terminal function selection	0- Undefined 1- Servo ready signal 2- Rotation signal 3-Zero speed signal 4- Torque arrival 5-speed reaching signal 6-Position arrival signal 7-Position proximity signal 8-Torque limit 9-Speed limit 10- Brake, 11- Warning, 12- Alarm, 13- Reserved 14- Reserved, 15- Reserved 16- Interrupt fixed length completion 17- Origin regression completed 18- Electrical origin regression completed 19- Speed arrived 20- Initial angle identification completed 21-Z phase signal output	--	1	Effective immediately	Set anytime	Ordinary users

Code	Name	Set range	unit	value	Effective mode	Set method	Set mode
P02-01	DO2 terminal function selection	0- Undefined 1- Servo ready signal 2- Rotation signal 3-Zero speed signal 4- Torque arrival 5-speed reaching signal 6-Position arrival signal 7-Position proximity signal 8-Torque limit 9-Speed limit 10- Brake, 11- Warning, 12-Alarm, 13- Reserved 14- Reserved, 15- Reserved 16- Interrupt fixed length completion 17- Origin regression completed 18- Electrical origin regression completed 19- Speed arrived 20- Initial angle identification completed	--	6	Effective immediately	Set anytime	Ordinary users

Code	Name	Set range	unit	value	Effective mode	Set method	Set mode
P02-02	DO3 terminal function selection	0- Undefined 1- Servo ready signal 2- Rotation signal 3-Zero speed signal 4- Torque arrival 5-speed reaching signal 6-Position arrival signal 7-Position proximity signal 8-Torque limit 9-Speed limit 10- Brake, 11- Warning, 12- Alarm, 13- Reserved 14- Reserved, 15- Reserved 16- Interrupt fixed length completion 17- Origin regression completed 18- Electrical origin regression completed 19- Speed arrived 20- Initial angle identification completed	--	10	Effective immediately	Set anytime	Ordinary users

Code	Name	Set range	unit	value	Effective mode	Set method	Set mode
P02-03	DO4 terminal function selection	0- Undefined 1- Servo ready signal 2- Rotation signal 3-Zero speed signal 4- Torque arrival 5-speed reaching signal 6-Position arrival signal 7-Position proximity signal 8-Torque limit 9-Speed limit 10- Brake, 11- Warning, 12- Alarm, 13- Reserved 14- Reserved, 15- Reserved 16- Interrupt fixed length completion 17- Origin regression completed 18- Electrical origin regression completed 19- Speed arrived 20- Initial angle identification completed	--	12	Effective immediately	Set anytime	Ordinary users
P02-16	DO1 terminal logic selection	0-Output ON when valid 1. Output OFF when valid	--	0	Effective immediately	Set anytime	Ordinary users
P02-17	DO2 terminal logic selection	0-Output ON when valid 1. Output OFF when valid	--	0	Effective immediately	Set anytime	Ordinary users
P02-18	DO3 terminal logic selection	0-Output ON when valid 1. Output OFF when valid	--	0	Effective immediately	Set anytime	Ordinary users
P02-19	DO4 terminal logic selection	0-Output ON when valid 1. Output OFF when valid	--	0	Effective immediately	Set anytime	Ordinary users
P02-32	DO signal source	0~7	--	0	Effective immediately	Stop setting	Ordinary users
P02-35	DO filtering time	0~5000	ms	10	Effective immediately	Stop setting	Ordinary users

8.4 P03 gain adjustment parameter group

Code	Name	Set range	unit	value	Effective mode	Set method	Set mode
P03-00	Self tuning mode selection	0-Manually adjust the gain parameter 1-Standard mode, use the standard rigidity table to adjust the gain parameter 2-Positioning mode, use the positioning rigidity table to adjust the gain parameter	--	1	Effective immediately	Set anytime	Ordinary users
P03-01	Rigid grade	0~31	--	12	Effective immediately	Set anytime	Ordinary users
P03-02	Load rotation inertia ratio	0~12000	%	100	Effective immediately	Set anytime	Ordinary users
P03-03	Real time inertia ratio	0~65535	%	0	Effective immediately	Set anytime	Ordinary users
P03-04	Position loop gain	0~20000	0.1Hz	400	Effective immediately	Set anytime	Ordinary users
P03-05	Speed loop gain	1~20000	0.1Hz	250	Effective immediately	Set anytime	Ordinary users
P03-06	Speed loop integral constant time	15~51200	0.01ms	3183	Effective immediately	Set anytime	Ordinary users
P03-07	2nd position loop gain	0~20000	0.1Hz	640	Effective immediately	Set anytime	Ordinary users
P03-08	2nd speed loop gain	1~20000	0.1Hz	400	Effective immediately	Set anytime	Ordinary users
P03-09	2nd speed loop Integration constant time	15~51200	0.01ms	2000	Effective immediately	Set anytime	Ordinary users
P03-10	PDFF control coefficient	0~1000	‰	1000	Effective immediately	Set anytime	Manufacturer mode

Code	Name	Set range	unit	value	Effective mode	Set method	Set mode
P03-11	Damping	0~1000	‰	0	Effective immediately	Set anytime	Manufacturer mode
P03-12	Selection of position feed forward control	0-no speed feed forward 1. Internal speed feed forward 2-pulse type: AI1 is used for speed feed forward ECAT type: In CSP mode, use 60B1 as speed feed forward 3-Pulse type: AI2 is used for speed feed forward	--	1	Effective immediately	Stop setting	Ordinary users
P03-13	Speed feed forward filtering time	0~6400	0.01ms	50	Effective immediately	Set anytime	Ordinary users
P03-14	Speed feed forward gain	0~1000	‰	0	Effective immediately	Set anytime	Ordinary users
P03-15	Torque feed forward filtering time	0~6400	0.01ms	50	Effective immediately	Set anytime	Ordinary users
P03-16	Torque feed forward gain	0~2000	‰	0	Effective immediately	Set anytime	Ordinary users
P03-17	Speed feedback average filtering level	0~4	--	0	Effective immediately	Stop setting	Ordinary users
P03-18	Speed feedback low-pass filtering cut-off frequency	100~4000	Hz	4000	Effective immediately	Set anytime	Ordinary users
P03-19	Performance mode	0-High speed mode 1- High performance mode, Kp switch 2-High performance mode, Ki switch	--	0	Stop and restart	Stop setting	Manufacturer mode

Code	Name	Set range	unit	value	Effective mode	Set method	Set mode
P03-20	Gain switch mode	0-GF mode: Fixed first group gain 1-GF mode: Fixed first group gain, using external DI for P and PI switch 2-GS mode: switch using external DI signal 3-GS mode: Switch based on torque command size 4-GS mode: Switch based on speed command size 5-GS mode: based on speed command Switch according to the acceleration size 6-GI mode: Interpolation based on speed command size 7-GS mode: Switch based on the size of the positional deviation 8-GS mode: No position command<first group gain>, with position command<second group gain> 9-GS mode: Positioning completed<first group gain>, positioning incomplete<second group gain> 10-GS mode: Switch based on speed feedback size 11-GS mode: No position command and low feedback speed<first group gain>, with position command<second group gain>	--	0	Effective immediately	Set anytime	Ordinary users
P03-21	Gain switch delay time	0~10000	0.1ms	50	Effective immediately	Set anytime	Ordinary users
P03-22	Gain switch threshold	0~20000	--	50	Effective immediately	Set anytime	Ordinary users
P03-23	Gain switch delay	0~20000	--	30	Effective immediately	Set anytime	Ordinary users
P03-24	Position gain switch time	0~10000	0.1ms	30	Effective immediately	Set anytime	Ordinary users
P03-25	Speed feedback selection	0-FPGA speed measurement 1-mcu uses M method for speed measurement	--	0	Stop and restart	Set anytime	R&D personnel
P03-26	Current loop gain adjustment coefficient	0-10240	--	1024	Effective immediately	Set anytime	Ordinary users

8.5 P05 Position Control Parameter Group

Code	Name	Set range	unit	value	Effective mode	Set method	Set mode
P05-00	Single cycle pulse count	0~1048576	P/REV	10000	Stop and restart	Stop setting	Ordinary users
P05-02	Electronic gear ratio of 1 molecule	1~1073741824	--	1	Effective immediately	Set anytime	Ordinary users
P05-04	Electronic gear ratio 1 denominator	1~1073741824	--	1	Effective immediately	Set anytime	Ordinary users
P05-06	Electronic gear ratio 2 molecules	1~1073741824	--	1	Effective immediately	Set anytime	Ordinary users
P05-08	Electronic gear ratio 2 denominator	1~1073741824	--	1	Effective immediately	Set anytime	Ordinary users
P05-14	Electronic gear switch enable	0~1	--	0	Effective immediately	Stop setting	Ordinary users
P05-15	Location command source	0-Low speed pulse input 1. High speed pulse input 2-Division output OA, OB signals 3- Constant at 0 4- Internal multi-stage pulse input	--	0	Effective immediately	Stop setting	Ordinary users
P05-16	Command pulse form	0-pulse+direction 1-AB phase x4 2-CW+CCW 3-AB phase x1	--	0	Stop and restart	Stop setting	Ordinary users
P05-17	Reverse phase of command pulse signal	0-pulse, sign are not reversed 1-pulse inversion, sign non inversion 2-pulse not reversed, sign reversed 3-pulse inversion, sign inversion	--	0	Stop and restart	Stop setting	Ordinary users
P05-18	Pulse signal filtering time	0~255	20ns	25	Stop and restart	Stop setting	Ordinary users
P05-19	Direction signal input filtering time	0~255	20ns	25	Stop and restart	Stop setting	Ordinary users
P05-20	Position command filtering time	0~65535	0.1ms	0	Effective immediately	Stop setting	Ordinary users

Code	Name	Set range	unit	value	Effective mode	Set method	Set mode
P05-21	Position command speed calculation filtering time	0~1280	0.1 ms	0	Effective immediately	Stop setting	Ordinary users
P05-22	Location unit setting	0-Encoder unit 1- command Unit	--	1	Stop and restart	Set anytime	Ordinary users
P05-25	Selection of pulse output source	0-Encoder allocation output 1-command pulse synchronous output 2- No output 3-Parameter trigger, starting output from P5-35, outputting P5-34 set number of pulses	--	0	Stop and restart	Stop setting	Ordinary users
P05-26	Pulse frequency division output phase	0-A ahead of B 1-B ahead of A	--	0	Stop and restart	Stop setting	Ordinary users
P05-27	Z-pulse output effective level	0- High current effective 1- Low current effective	--	1	Stop and restart	Stop setting	Ordinary users
P05-28	Single phase maximum frequency of pulse output	1~25000	KHz	1000	Effective immediately	Set anytime	Ordinary users
P05-29	Single phase minimum frequency of pulse output	1~25000	KHz	50	Effective immediately	Set anytime	Ordinary users
P05-30	Pulse output single-phase pulse count	0~0xFFFFFFFF	P	2500	Stop and restart	Stop setting	Ordinary users
P05-32	Pulse output signal type	0-AB phase x4 1-Pulse+Direction 2-CW+CCW 3-AB phase x1	--	0	Effective immediately	Set anytime	Ordinary users
P05-33	Default logic current for pulse output	0-A is low, B is low 1-A is high, B is low 2-A is low, B is high 3-A is high, B is high	--	0	Stop and restart	Set anytime	Ordinary users
P05-34	Number of single pulse outputs	-32768~32767	P	0	Effective immediately	Set anytime	R&D personnel
P05-35	Pulse output single trigger	0~1	--	0	Effective immediately	Set anytime	R&D engineer

Code	Name	Set range	unit	value	Effective mode	Set method	Set mode
P05-36	Pulse output counting	-2147483648~2147483647	P	0	read-only	read-only	Ordinary users
P05-38	Pulse output execution mode	0-high synchronization mode, with small pulse output lag and large output frequency fluctuations 1-Stable mode, with stable pulse output frequency but large lag	--	0	Stop and restart	Set anytime	Ordinary users
P05-39	Z-pulse dead time	0~30000	0.0001	3	Stop and restart	Set anytime	Ordinary users
P05-40	Origin reset enable	0-Close Origin Reset 1. Enable the origin reset function through DI input ORGSET signal 2. Enable electrical zeroing function by inputting ORGSET signal through DI 3. Immediately start the origin reset after power on 4. Immediately reset the origin point 5. Immediately set electrical zeroing 6- Using the current position as the origin	--	0	Effective immediately	Set anytime	Ordinary users

Code	Name	Set range	unit	value	Effective mode	Set method	Set mode
P05-41	Origin reset mode	0-Forward return to zero, deceleration point is the origin switch 1. Reverse to zero, deceleration point is the origin switch 2- Forward return to zero, deceleration point is Z signal 3- Reverse to zero, deceleration point is Z signal 4- Forward return to zero, deceleration point is the origin switch signal, origin is the Z signal 5- Reverse to zero, deceleration point is the origin switch signal, origin is the Z signal 6-Forward return to zero, deceleration point and origin are forward limit switches 7-Reverse return to zero, deceleration point and origin are reverse limit switches 8-Forward return to zero, deceleration point is forward limit switch, origin is Z signal 9-Reverse return to zero, deceleration point is reverse limit switch, origin is Z signal 10-When P05-40=1, the current position can be set as the origin through DI triggering (32)	--	0	Effective immediately	Stop setting	Ordinary users
P05-42	Origin high-speed search speed	0~3000	rpm	100	Effective immediately	Set anytime	Ordinary users
P05-43	Origin low-speed search speed	0~1000	rpm	10	Effective immediately	Set anytime	Ordinary users

Code	Name	Set range	unit	value	Effective mode	Set method	Set mode
P05-44	Origin acceleration and deceleration time	0~1000	ms	1000	Effective immediately	Set anytime	Ordinary users
P05-45	Origin search time	0~65535	ms	50000	Effective immediately	Set anytime	Ordinary users
P05-46	Origin offset and limit handling methods	0~3 (by bit) 0- Is the origin offset 1- Does it reverse zeroing when encountering a limit switch	0	0	Effective immediately	Stop setting	Ordinary users
P05-48	Origin mechanical offset	-1073741824~1073741824	ins	0	Effective immediately	Set anytime	Ordinary users
P05-50	Position deviation clearing action	0- clearing position deviation count when Servo off and malfunction 1-Clear the position deviation count when a malfunction occurs 2- Clear position deviation count through CLR signal	--	0	Effective immediately	Stop setting	Ordinary users
P05-51	Positioning completion signal COIN output conditions	0-Output when the absolute value of position deviation is less than the positioning completion threshold (bus type is object dictionary 6067h) 1-When the absolute value of position deviation is less than the positioning completion threshold (bus type is object dictionary 6067h) and after filtered position command is 0, output 2-When the absolute value of the position deviation is less than the positioning completion threshold (bus type is object dictionary 6067h) and before filtered position command is 0, output	--	0	Effective immediately	Set anytime	Ordinary users
P05-52	Positioning completion threshold	1~65535	ins	1	Effective immediately	Set anytime	Ordinary users

Code	Name	Set range	unit	value	Effective mode	Set method	Set mode
P05-53	Positioning completed approaching signal threshold	1~65535	ins	10000	Effective immediately	Set anytime	Ordinary users
P05-54	Positioning completion retention time	0~30000	ms	0	Effective immediately	Set anytime	Ordinary users
P05-56	Multi cycle absolute position offset low by 32 bits	0~1073741824	P	0	Effective immediately	Stop setting	Ordinary users
P05-58	Multi cycle absolute position offset high by 32 bits	0~1073741824	P	0	Effective immediately	Stop setting	Ordinary users
P05-60	Encoder multi cycle data bias	0~65535	P	0	Effective immediately	Stop setting	Ordinary users
P05-61	Multi cycle absolute position mode 2 mechanical gear ratio molecule	1~65535	--	1	Effective immediately	Stop setting	Ordinary users
P05-62	Multi cycle absolute position mode 2 mechanical gear ratio denominator	1~65535	--	1	Effective immediately	Stop setting	Ordinary users
P05-64	Multi cycle absolute position mode 2 mechanical absolute position upper limit value (low)	0~1073741824	P	0	Effective immediately	Stop setting	Ordinary users

Code	Name	Set range	unit	value	Effective mode	Set method	Set mode
P05-66	Multi cycle absolute position mode 2 mechanical absolute position upper limit value (high)	0~1073741824	P	0	Effective immediately	Stop setting	Ordinary users
P05-76	Z-signal pulse width	0~1000	250 us	8 (default 2ms)	Stop and restart	Stop setting	Ordinary users

8.6 P06 Speed Control Parameter Group

Code	Name	Set range	unit	value	Effective mode	Set method	Set mode
P06-00	Source of speed command	0-Speed command A 1-Speed command B 2-Speed command A+Speed command B 3- Switch between speed command A and speed command B	--	0	Effective immediately	Stop setting	Ordinary users
P06-01	Source of Speed command A	0-User parameter setting 1- Input from analog AI1 2- Input from analog AI2	--	0	Effective immediately	Stop setting	Ordinary users
P06-02	Source of Speed Command B	0-User parameter setting 1- Input from analog AI1 2- Input from analog AI2	--	0	Effective immediately	Stop setting	Ordinary users
P06-03	Speed command digital setting value	-6000~6000	rpm	200	Effective immediately	Set anytime	Ordinary users
P06-04	Jogging speed setting value	0~6000	rpm	100	Effective immediately	Set anytime	Ordinary users

Code	Name	Set range	unit	value	Effective mode	Set method	Set mode
P06-05	Speed command acceleration ramp time	0~65535	ms	200	Effective immediately	Set anytime	Ordinary users
P06-06	Speed command deceleration ramp time	0~65535	ms	200	Effective immediately	Set anytime	Ordinary users
P06-07	Maximum speed limit value	0~6000	rpm	6000	Effective immediately	Set anytime	Ordinary users
P06-08	forward speed limit	0~6000	rpm	6000	Effective immediately	Set anytime	Ordinary users
P06-09	Reverse speed limit	0~6000	rpm	6000	Effective immediately	Set anytime	Ordinary users
P06-10	Torque feed forward enable	0-speed loop does not use torque feed forward 1-Speed loop uses torque feed forward	--	1	Effective immediately	Set anytime	Ordinary users
P06-11	Zero speed clamp/zero fixed speed command threshold	0~6000	rpm	10	Effective immediately	Set anytime	Ordinary users
P06-12	Rotation detection speed threshold	0~1000	rpm	20	Effective immediately	Set anytime	Ordinary users
P06-13	Consistent speed signal width	0~100	rpm	10	Effective immediately	Set anytime	Ordinary users
P06-14	Speed reaches signal threshold	10~6000	rpm	1000	Effective immediately	Set anytime	Ordinary users
P06-15	Zero speed output signal threshold	1~6000	rpm	10	Effective immediately	Set anytime	Ordinary users

8.7 P07 Torque Control Parameter Group

Code	Name	Set range	unit	value	Effective mode	Set method	Set mode
P07-00	Torque command selection	0-Torque command A 1- Torque command B 2-Torque command A+torque command B 3- Torque command A/B, switchable 4- Communication Given (P31-10)	--	0	Effective immediately	Stop setting	Ordinary users
P07-01	Source of torque command A	0-Internal number given (P7-03) 1- Analog Channel 1 Input (AI1) 2- Analog Channel 2 Input (AI2)	--	0	Effective immediately	Stop setting	Ordinary users
P07-02	Source of torque command B	0-Internal number given (P7-03) 1- Analog Channel 1 Input (AI1) 2- Analog Channel 2 Input (AI2)	--	0	Effective immediately	Stop setting	Ordinary users
P07-03	Torque command keyboard setting	-3000~3000	‰	0	Effective immediately	Set anytime	Ordinary users

Code	Name	Set range	unit	value	Effective mode	Set method	Set mode
P07-04	Source of torque limitation	0-Internal torque limit, using P7-05 and P7-06 limits 1-Torque limit switchable forward torque limit: P-CL selects P7-05/P7-07 Reverse torque limit: N-CL selects P7-06/P7-08 2- Use analog/object dictionary to limit torque 3- Use analog/object dictionary to limit torque, P-CL, N-CL control whether to enable external torque limits P7-07, P7-08 respectively. If external torque limits are enabled, take the smaller of analog and external torque as the limit 4-Torque limit switchable forward torque limit: P-CL selects P7-04/Analog (Ethercat) Reverse torque limit: N-CL selects P7-05/Analog (Ethercat)	--	0	Effective immediately	Set anytime	Ordinary users
P07-05	Internal torque limit value for forward rotation	0~3000	‰	3000	Effective immediately	Set anytime	Ordinary users
P07-06	Reverse internal torque limit value	0~3000	‰	3000	Effective immediately	Set anytime	Ordinary users
P07-07	External torque limit value on the forward rotation side	0~3000	‰	3000	Effective immediately	Set anytime	Ordinary users
P07-08	Reverse side external torque limit value	0~3000	‰	3000	Effective immediately	Set anytime	Ordinary users
P07-09	Torque command filter time 1	0~3000	10us	79	Effective immediately	Set anytime	Ordinary users
P07-10	Torque command filter time 2	0~3000	10us	79	Effective immediately	Set anytime	Ordinary users
P07-11	Emergency stop torque	0~3000	‰	1000	Effective immediately	Stop setting	Ordinary users

Code	Name	Set range	unit	value	Effective mode	Set method	Set mode
P07-12	Speed limit source selection	0-Internal speed limit, P7-13 and P7-14 1-Pulse type: using AI limit; Bus type: using 607Fh value limit 2. The forward and reverse speed limits are the same, use V-SEL to select the limit values P7-13/P7-14	--	1	Effective immediately	Set anytime	Ordinary users
P07-13	Internal speed forward limit value during torque control	0~6000	rpm	3000	Effective immediately	Set anytime	Ordinary users
P07-14	Internal speed reverse limit value during g torque control	0~6000	rpm	3000	Effective immediately	Set anytime	Ordinary users
P07-15	The torque reaches the reference value	0~3000	‰	0	Effective immediately	Set anytime	Ordinary users
P07-16	Torque reaches hysteresis loop	0~3000	‰	200	Effective immediately	Set anytime	Ordinary users
P07-17	Speed limit judge time	5~300	0.1ms	10	Effective immediately	Set anytime	Ordinary users
P07-18	T-LMT selection	0-AI1 1-AI2	--	0	Effective immediately	Set anytime	Manufacturer mode
P07-19	V-LMT selection	0-AI1 1-AI2	--	one	Effective immediately	Set anytime	Manufacturer mode

8.8 P08 Analog Parameter Group

Code	Name	Set range	unit	value	Effective mode	Set method	Set mode
P08-00	Analog quantity 10V corresponds to speed	0~6000	rpm	3000	Effective immediately	Set anytime	Ordinary users

Code	Name	Set range	unit	value	Effective mode	Set method	Set mode
P08-01	Torque correspond to analog 10V	0~300	%	100	Effective immediately	Set anytime	Ordinary users
P08-02	AI1 offset	-32768~32767	mv	0	Effective immediately	Set anytime	Ordinary users
P08-03	AI1 input filtering time	0~65535	10us	200	Effective immediately	Set anytime	Ordinary users
P08-04	AI1 Input value Filter Enable	0-Disability 1- Enable	--	1	Effective immediately	Set anytime	Ordinary users
P08-05	AI1 Dead Zone	-32768~32767	0.1mv	100	Effective immediately	Set anytime	Ordinary users
P08-06	AI1 zero drift	-32768~32767	0.1mv	0	Effective immediately	Set anytime	Ordinary users
P08-07	AI2 offset	-32768~32767	mv	0	Effective immediately	Set anytime	Ordinary users
P08-08	AI2 input filtering time	0~65535	10us	200	Effective immediately	Set anytime	Ordinary users
P08-09	AI2 Input value Filter Enable	0-Disability 1- Enable	--	1	Effective immediately	Set anytime	Ordinary users
P08-10	AI2 Dead Zone	-32768~32767	0.1mv	100	Effective immediately	Set anytime	Ordinary users
P08-11	AI2 zero drift	-32768~32767	0.1mv	0	Effective immediately	Set anytime	Ordinary users

8.9 P09 Communication Control Parameter Group

Code	Name	Set range	unit	value	Effective mode	Set method	Set mode
P09-00	Axis address	1~247	--	1	Effective immediately	Set anytime	Ordinary users
P09-01	RS232 baud rate setting	0-2400 1-4800 2-9600 3-19200 4-38400 5-57600 6-115200	100bps	5	Stop and restart	Set anytime	Ordinary users

Code	Name	Set range	unit	value	Effective mode	Set method	Set mode
P09-02	Parity check settings	0- 8-None-1 1- 8-Even-1 2- 8-Odd-1 3- 8-None-2 4- 8-Even-2 5- 8-Odd-2 8- 9-None-1 9- 9-Even-1 10- 9-Odd-1 11- 9-None-2 12- 9-Even-2 13- 9-Odd-2	--	0	Effective immediately	Set anytime	Ordinary users
P09-03	Modbus communication error code	0- No errors 1- command error, unsupported command code 2- Address error, accessed illegal address 3- Data value error, illegal data written 4- Slave equipment failure, slave data processing error 5- command received correctly, but command execution is incomplete 6- The device is busy and unable to respond to the current frame 8- Verification error, received data frame verification error from the slave station 10- No access permission, currently not authorized to access registers 11- Incorrect data length, incorrect access length 12 frame error, receiving frame error from the slave station 13- Other errors	--	0	read-only	read-only	Ordinary users
P09-04	EtherCAT Slave Name	0~65535	--	0	read-only	read-only	Ordinary users
P09-05	EtherCAT Slave Alias	0~65535	--	0	Effective immediately	Stop setting	Ordinary users
P09-06	AL status code	0~65535	--	0	read-only	read-only	Ordinary users
P09-08	FPGA synchronization mode selection	0-asynchronous 1-MCU calculation synchronous control 2-FPGA self synchronization	--	2	Effective immediately	Stop setting	Manufacturer mode

Code	Name	Set range	unit	value	Effective mode	Set method	Set mode
P09-09	EtherCAT synchronization point	0~65535	--	0	Stop and restart	Set anytime	Manufacturer mode
P09-10	FPGA synchronous detection deviation threshold	100~4000	ns	3000	Effective immediately	Stop setting	Ordinary users
P09-11	XML version	0~65535	--	0	read-only	read-only	Ordinary users
P09-12	EtherCAT state machine	0~65535	--	0	read-only	read-only	Ordinary users
P09-13	SDO writing Eeprom switch	0-Prohibit SDO from writing parameters 1. Enable SDO to write user parameters object group 2000h 2- Prohibit SDO from writing object groups for 6000h 3- Allow SDO to write user parameters object group 2000h and 6000h	--	3	Effective immediately	Randomly set	Ordinary users
P09-14	Number of synchronization losses	0~65535	--	0	read-only	read-only	Ordinary users
P09-15	EtherCAT synchronization interrupt loss allowed amount	1~20	--	9	Effective immediately	Randomly set	Ordinary users
P09-16	Port 0 invalid/incorrect frame count	0- Port 0 Invalid Frame Count 1- Port 0 Error Frame Count	--	0	read-only	read-only	Ordinary users
P09-17	Port 1 invalid/incorrect frame count	0- Port 1 Invalid Frame Count 1- Port 1 Error Frame Count	--	0	read-only	read-only	Ordinary users
P09-18	Port forward error count	0-port 0 forward error count 1- Port 1 forward error count	--	0	read-only	read-only	Ordinary users
P09-19	Processing unit and PDI error count	0- processing unit error count 1 -PDI error count	--	0	read-only	read-only	Ordinary users
P09-20	Port loss count	0-Port 0 Loss Count 1- Port 1 loss count	--	0	read-only	read-only	Ordinary users
P09-21	EtherCAT Master Station Selection	0~3	--	2	Stop and restart	Stop setting	Ordinary users

Code	Name	Set range	unit	value	Effective mode	Set method	Set mode
P09-22	Location cache selection	0~1	--	0	Effective immediately	Stop setting	Ordinary users
P09-23	CSP position command increment too large threshold	1~7	--	3	Effective immediately	Set anytime	Ordinary users
P09-24	CSP position command increment too large times	0~65535	--	0	read-only	read-only	Ordinary users
P09-25	Whether to use VDI or not	0~1	--	0	Effective immediately	Stop setting	Ordinary users
P09-26	VDI default value after power on	0~65535	--	0	Stop and restart	Set anytime	Ordinary users
P09-27	Do you use VDO	0~1	--	0	Effective immediately	Stop setting	Ordinary users
P09-28	Default value when VDO function selection is 0	0~65535	--	0	Effective immediately	Stop setting	Ordinary users
P09-29	CAN baud rate setting	0- 20kHZ 1- 50kHZ 2- 100kHZ 3- 125kHZ 4- 250kHZ 5- 500kHZ 7- 1000kHZ		5	Stop and restart	Set anytime	Ordinary users
P09-32	Effective method of 485 communication parameters	0-Restart after modifying 485 parameters to take effect 1. Effective immediately after modifying the 485 parameter		0	Stop and restart	Set anytime	Ordinary users

8.10 P0A Stop Control Parameter Group

Code	Name	Set range	unit	value	Effective mode	Set method	Set mode
P0A-00	Servo OFF Stop mode	0-Free Stop 1-Zero speed Stop 2-Zero speed Stop, maintain DB status after Stop 3-DB Stop, maintain DB status after Stop	--	0	Effective immediately	Stop setting	Ordinary users

Code	Name	Set range	unit	value	Effective mode	Set method	Set mode
P0A-01	Type 1 fault Stop method	0-Free Stop 1-DB Stop, free operation after Stop 2-DB Stop, maintain DB status after Stop	--	0	Effective immediately	Stop setting	Ordinary users
P0A-02	Type 2 fault Stop method	0-Free Stop 1-Zero speed Stop 2-Zero speed Stop, maintain DB status after Stop 3-DB Stop, maintain DB status after Stop 4-DB Stop, free operation after Stop	--	0	Effective immediately	Stop setting	Ordinary users
P0A-03	Over travel stop mode	0-Free Stop 1-Zero speed Stop 2-Zero speed Stop, free operation after Stop	--	1	Effective immediately	Stop setting	Ordinary users
P0A-04	Over travel Stop speed switch threshold	10~6000	rpm	6000	Effective immediately	Stop setting	Ordinary users
P0A-05	Enable zero speed Stop when power off	0~1	--	0	Effective immediately	Stop setting	Ordinary users
P0A-06	Stop zero speed threshold	10~6000	rpm	100	Effective immediately	Stop setting	Ordinary users
P0A-07	Servo on signal filtering time	0~64	ms	0	Effective immediately	Stop setting	Ordinary users
P0A-09	Delay in receiving brake opening command	40~500	ms	250	Effective immediately	Set anytime	Ordinary users
P0A-10	Brake closing time	1~1000	ms	150	Effective immediately	Set anytime	Ordinary users
P0A-11	Brake safety speed	0~3000	rpm	30	Effective immediately	Set anytime	Ordinary users
P0A-12	The longest waiting time for the brake to close after the servo is turned off	1~1000	ms	500	Effective immediately	Set anytime	Ordinary users
P0A-13	DB release completion time	20~2000	ms	60	Effective immediately	Random ly set	Ordinary users

8.11 P0B Fault and Protection Parameter Group

Code	Name	Set range	unit	value	Effective mode	Set method	Set mode
P0B-00	LED warning display selection	0-Warning Display 1- Warning not displayed	--	0	Effective immediately	Stop setting	Ordinary users
P0B-01	Enable fault record storage	0-Fault record storage enable 1- Fault record storage disabled	--	0	Effective immediately	Randomly set	Manufacturer mode
P0B-02	Selection of power input phase loss protection	0-Enable phase loss fault, prohibit phase loss warning 1. Enable phase loss fault, enable phase loss warning 2- Prohibit phase loss faults and phase loss warnings	--	0	Effective immediately	Stop setting	Ordinary users
P0B-03	Drive over temperature protection point	0~1000	0.1℃	900	Stop and restart	Stop setting	Manufacturer mode
P0B-04	IGBT over temperature threshold	0~2000	0.1℃	950	Effective immediately	Set anytime	Manufacturer mode
P0B-05	Overload alarm disabled	0-Enable overload alarm 1. Turn off the motor overload alarm 2- Turn off the driver overload alarm 3- Turn off motor overload and driver overload alarms	--	0	Effective immediately	Stop setting	Ordinary users
P0B-06	Motor overload level	0~400	%	0	Effective immediately	Stop setting	Ordinary users
P0B-07	Motor overload protection gain	50~300	%	100	Effective immediately	Stop setting	Ordinary users
P0B-08	Blockage alarm enabled	0~1	--	1	Effective immediately	Set anytime	Ordinary users
P0B-09	Duration of blockage detection	10~65535	ms	200	Effective immediately	Set anytime	Ordinary users
P0B-10	Car protection selection	0- no sudden speed alarm 1. Enable the sudden speed alarm	--	1	Effective immediately	Set anytime	Ordinary users
P0B-11	Maximum pulse input frequency for position	100~4000	KHz	4000	Effective immediately	Stop setting	Ordinary users

Code	Name	Set range	unit	value	Effective mode	Set method	Set mode
P0B-12	Excessive position deviation fault threshold	1~1073741824	ins	3145 728	Effective immediately	Set anytime	Ordinary users
P0B-15	Software location restriction settings	0- Do not enable software location restrictions 1. Enable software location restrictions 2-Enable software position limit after origin regression	--	0	Effective immediately	Stop setting	Ordinary users
P0B-16	Over speed determination threshold	0~10000	rpm	0	Stop and restart	Set anytime	Ordinary users
P0B-17	Encoder multi loop overflow fault prohibited	0~1	--	0	Effective immediately	Stop setting	Ordinary users
P0B-19	SIGN signal disturbance warning threshold	0~65535	ins	5	Effective immediately	Set anytime	Ordinary users
P0B-20	SIGN signal disturbance error threshold	0~65535	ins	100	Effective immediately	Set anytime	Ordinary users
P0B-27	Custom warning switch for motor	0- Customize motor does not alarm 1- Customize click alarm	--	1	Effective immediately	Set anytime	Ordinary users
P0B-28	Motor mismatch detection	0- Enable motor mismatch detection 1- Prohibition of motor mismatch detection	--	0	Effective immediately	Set anytime	Ordinary users
P0B-29	Can the alarm selection be cleared when the servo is turned on	0- Cannot clear alarm 1- Clearable alarms can be cleared when the servo is turned on	--	0	Effective immediately	Set anytime	Ordinary users
P0B-30	Main circuit charging time	0~30000 When the setting value is 30000, AL.073 alarm can be blocked	ms	0	Stop and restart	Set anytime	Ordinary users
P0B-31	Multiple position DI false triggering alarm shielding	0~1	--	0	Restart to take effect	Stop setting	Ordinary users

8.12 P0C multi-stage position control parameter group

Code	Name	Set range	unit	value	Effective mode	Set method	Set mode
P0C-00	Multi position operation mode	0-End of single run Stop 1-Loop operation 2-DI switch operation 3- Sequential operation (without delay between segments)	--	1	Effective immediately	Stop setting	Ordinary users
P0C-01	Selection of displacement execution segments	1~16	--	2	Effective immediately	Stop setting	Ordinary users
P0C-02	Remaining processing method	0- Include in the next paragraph 1. Enter the next paragraph and ignore the remaining amount in this paragraph	--	0	Effective immediately	Stop setting	Ordinary users
P0C-03	Waiting time unit	0-milliseconds (ms) 1-second (s)	--	1	Effective immediately	Stop setting	Ordinary users
P0C-04	Selection of displacement command type	0-Relative displacement 1- Absolute displacement	--	0	Effective immediately	Stop setting	Ordinary users
P0C-05	Selection of starting segment for loop mode	0~16	--	0	Effective immediately	Stop setting	Ordinary users
P0C-10 ~ P0C-40	The displacement of the i-th (1-16) segment	-1073741825~1073741824	ins	0	Effective immediately	Set anytime	Ordinary users
P0C-42 ~ P0C-57	Moving speed of section i (1-16)	1~6000	rpm	200	Effective immediately	Set anytime	Ordinary users
P0C-58 ~ P0C-73	The acceleration and deceleration time of the i-th (1-16) segment movement	0~65535	ms	1	Effective immediately	Set anytime	Ordinary users

Code	Name	Set range	unit	value	Effective mode	Set method	Set mode
P0C-74 ~ P0C-89	Waiting time after the completion of the i-th (1-16) segment shift	0~10000	Ms or s (unit determined by P0C-03)	10	Effective immediately	Set anytime	Ordinary users

8.13 P0D multi segment speed control parameters

Code	Name	Set range	unit	value	Effective mode	Set method	Set mode
P0D-00	Multi segment speed command operation mode	0-Single run, Stop upon completion of run 1-Loop operation 2. switch operation interruption through external DI signal	--	1	Effective immediately	Stop setting	Ordinary users
P0D-01	Selection of End Segment Number for Speed Command	1~16	--	16	Effective immediately	Stop setting	Ordinary users
P0D-02	Selection of Running Time Unit	0-0.1s 1-0.1min	--	0	Effective immediately	Stop setting	Ordinary users
P0D-05	Acceleration time 1	0~65535	ms	10	Effective immediately	Stop setting	Ordinary users
P0D-06	Acceleration time 2	0~65535	ms	10	Effective immediately	Stop setting	Ordinary users
P0D-07	Acceleration time 3	0~65535	ms	50	Effective immediately	Stop setting	Ordinary users
P0D-08	Acceleration time 4	0~65535	ms	50	Effective immediately	Set anytime	Ordinary users
P0D-10	Deceleration time 1	0~65535	ms	100	Effective immediately	Set anytime	Ordinary users
P0D-11	Deceleration time 2	0~65535	ms	100	Effective immediately	Set anytime	Ordinary users

Code	Name	Set range	unit	value	Effective mode	Set method	Set mode
P0D-12	Deceleration time 3	0~65535	ms	150	Effective immediately	Set anytime	Ordinary users
P0D-13	Deceleration time 4	0~65535	ms	150	Effective immediately	Set anytime	Ordinary users
P0D-20	The first segment command	-6000~6000	rpm	0	Effective immediately	Set anytime	Ordinary users
P0D-21	The second segment command	-6000~6000	rpm	100	Effective immediately	Set anytime	Ordinary users
P0D-22	The third segment command	-6000~6000	rpm	300	Effective immediately	Set anytime	Ordinary users
P0D-23	The fourth segment command	-6000~6000	rpm	500	Effective immediately	Stop setting	Ordinary users
P0D-24	The 5th segment command	-6000~6000	rpm	700	Effective immediately	Stop setting	Ordinary users
P0D-25	The 6th segment command	-6000~6000	rpm	900	Effective immediately	Stop setting	Ordinary users
P0D-26	The 7th segment command	-6000~6000	rpm	600	Effective immediately	Stop setting	Ordinary users
P0D-27	The 8th segment command	-6000~6000	rpm	300	Effective immediately	Stop setting	Ordinary users
P0D-28	The 9th segment command	-6000~6000	rpm	100	Effective immediately	Stop setting	Ordinary users
P0D-29	The 10th segment command	-6000~6000	rpm	-100	Effective immediately	Stop setting	Ordinary users
P0D-30	The 11th segment command	-6000~6000	rpm	-300	Effective immediately	Stop setting	Ordinary users

Code	Name	Set range	unit	value	Effective mode	Set method	Set mode
P0D-31	The 12th segment command	-6000~6000	rpm	-500	Effective immediately	Stop setting	Ordinary users
P0D-32	The 13th segment command	-6000~6000	rpm	-700	Effective immediately	Stop setting	Ordinary users
P0D-33	The 14th segment command	-6000~6000	rpm	-900	Effective immediately	Stop setting	Ordinary users
P0D-34	The 15th segment command	-6000~6000	rpm	-600	Effective immediately	Stop setting	Ordinary users
P0D-35	The 16th segment command	-6000~6000	rpm	-300	Effective immediately	Stop setting	Ordinary users
P0D-40~ P0D-55	The running time of the i-th (1-16) segment	0~65535	0.1s(min)	50	Effective immediately	Stop setting	Ordinary users
P0D-60 ~ P0D-75	Acceleration and deceleration time of segment i (1-16)	0- Zero acceleration and deceleration time 1- Acceleration and deceleration time 1 2- Acceleration and deceleration time 2 3- Acceleration and deceleration time 3 4- Acceleration and deceleration time 4	1	0	Effective immediately	Stop setting	Ordinary users

8.14 P0E adaptive adjustment parameter group

Code	Name	Set range	unit	value	Effective mode	Set method	Set mode
P0E-00	Adaptive filter working mode	0- No operation 1. Enable an adaptive notch filter to automatically update filter parameters 2- Enable two adaptive notch filters to automatically update filter parameters 3- Only identify the resonance frequency without updating the notch filter 4. Reset the parameters of the adaptive notch filter	--	0	Effective immediately	Set anytime	Ordinary users
P0E-01	Frequency of notch filter 1	50~4000	Hz	4000	Effective immediately	Set anytime	Ordinary users
P0E-02	Bandwidth of notch filter 1	0~20	--	2	Effective immediately	Set anytime	Ordinary users
P0E-03	Attenuation level of notch filter 1	0~99	--	0	Effective immediately	Set anytime	Ordinary users
P0E-04	Frequency of notch filter 2	50~4000	Hz	4000	Effective immediately	Set anytime	Ordinary users
P0E-05	Notch filter 2 bandwidth	0~20	--	2	Effective immediately	Set anytime	Ordinary users
P0E-06	Attenuation level of notch filter 2	0~99	--	0	Effective immediately	Set anytime	Ordinary users
P0E-07	Adaptive notch filter 1 frequency	50~4000	Hz	4000	Effective immediately	Set anytime	Ordinary users
P0E-08	Adaptive notch filter 1 bandwidth	0~20	--	2	Effective immediately	Set anytime	Ordinary users
P0E-09	Adaptive notch filter 1 attenuation level	0~99	--	0	Effective immediately	Set anytime	Ordinary users
P0E-10	Adaptive notch filter 2 frequency	50~4000	Hz	4000	Effective immediately	Set anytime	Ordinary users
P0E-11	Adaptive notch filter 2 bandwidth	0~20	--	2	Effective immediately	Set anytime	Ordinary users
P0E-12	Adaptive notch filter 2 attenuation level	0~99	--	0	Effective immediately	Set anytime	Ordinary users

Code	Name	Set range	unit	value	Effective mode	Set method	Set mode
P0E-13	resonance frequency	0~4000	Hz	0	read-only	read-only	Ordinary users
P0E-20	Disturbance observer gain	-1000~1000	A/rpm	0	Effective immediately	Set anytime	Ordinary users
P0E-21	Disturbance observer filtering time	0~2500	0.01 ms	50	Effective immediately	Set anytime	Ordinary users
P0E-22	Torque compensation value	-1000~1000	‰	0	Effective immediately	Set anytime	Ordinary users
P0E-23	forward friction compensation	-1000~1000	‰	0	Effective immediately	Set anytime	Ordinary users
P0E-24	Reverse friction compensation	-1000~1000	‰	0	Effective immediately	Set anytime	Ordinary users
P0E-25	Low frequency vibration suppression mode	0-Manually set low-frequency suppression parameters 1. Automatic identification of low-frequency suppression parameters	--	0	Effective immediately	Set anytime	Ordinary users
P0E-26	Low frequency resonance frequency A	10~1000	0.1Hz	1000	Effective immediately	Stop setting	Ordinary users
P0E-27	Low frequency suppression width	0~10	--	2	Effective immediately	Stop setting	Ordinary users
P0E-28	Low frequency vibrate Ratio of denominator /numerator frequency	0~30	--	12	Effective immediately	Stop setting	Ordinary users
P0E-29	Servo low-frequency vibration position deviation judgment threshold	0~1000	--	5	Effective immediately	Set anytime	Ordinary users
P0E-35	Self tuning response level	0-low response mode 1-Medium response mode 2-High response mode	--	1	Effective immediately	Set anytime	Ordinary users

Code	Name	Set range	unit	value	Effective mode	Set method	Set mode
P0E-36	Self tuning vibration determination threshold	0~1000	‰	20	Effective immediately	Set anytime	Ordinary users
P0E-37	Self tuning external load operation mode	0-Disable self-tuning function 1- Trajectory mode 2-Positioning mode	--	1	Effective immediately	Set anytime	Ordinary users
P0E-38	Self setting operating distance	0~2147483647	ins	40000	Effective immediately	Set anytime	Ordinary users
P0E-40	Self setting operating speed	0~3000	rpm	400	Effective immediately	Set anytime	Ordinary users
P0E-41	Self setting acceleration and deceleration time	0~20000	ms	100	Effective immediately	Set anytime	Ordinary users
P0E-42	Self setting waiting time	0~20000	ms	500	Effective immediately	Set anytime	Ordinary users
P0E-45	Online inertia identification mode	0- Do not enable online inertia identification 1. Enable online inertia identification, with the load inertia remaining basically unchanged 2- Enable online inertia identification, with slow changes in load inertia 3- Enable online inertia identification, with fast changes in load inertia	--	0	Effective immediately	Set anytime	Ordinary users
P0E-46	Offline inertia identification mode	0-Triangular wave velocity mode 1- Free jog mode	--	0	Effective immediately	Stop setting	Ordinary users
P0E-47	Offline inertia identification speed amplitude	100~1000	rpm	500	Effective immediately	Stop setting	Ordinary users
P0E-48	Offline inertia identification acceleration and deceleration time	20~800	ms	125	Effective immediately	Stop setting	Ordinary users
P0E-49	Inertia identification waiting time	50~10000	ms	800	Effective immediately	Stop setting	Ordinary users

Code	Name	Set range	unit	value	Effective mode	Set method	Set mode
P0E-50	Offline inertia identification of travel cycles	0~65535	0.01 circle	0	Effective immediately	Set anytime	Ordinary users
P0E-60	Torque gravity compensation value	-1000~1000	‰	0	Effective immediately	Set anytime	Ordinary users

8.15 P10 motor parameter group

Code	Name	Set range	unit	value	Effective mode	Set method	Set mode
P10-00	Motor model record	0- 40HK_A00330 1- 60HK_A00630 2- 60HK_A01330 3- 60HK_A01930 4- 80HK_A02430 5- 80HK_A03230 6- 80HK_A03825 7- 130HK_A04830 8- 130HK_A07220 9- 130HK_A09620 10- 180HK_A19015 11- 180HK_A28015 12- 180HK_A35015 13- 180HK_A48015 100- 80ZK_A02430 101- 80ZK_B02430 102- 60ZK_A01330 103- 60ZK_A01330_B	--	0	Stop and restart	Set anytime	R&D personnel
P10-01	Alternative motor models	1- 40HK_A00330 14- 60HK_A00630 15- 60HK_A01330 16- 60HK_A01930 17- 80HK_A02430 18- 80HK_A03230 19- 80HK_A03825 20- 130HK_A04830 21- 130HK_A07220 22- 130HK_A09620 23- 180HK_A19015 24- 180HK_A28015 25- 180HK_A35015 26- 180HK_A48015 104- 80ZK_A02430 105- 80ZK_B02430 106- 60ZK_A01330 107- 60ZK_A01330_B	--	0	Stop and restart	Set anytime	R&D personnel
P10-02	Encoder type	0-Tamagawa Linear Incremental Encoder 1- Tamagawa incremental encoder 16 -Tamagawa Absolute Encoder 32- Rotary Encoder 48- Grating encoder	--	16	Stop and restart	Stop setting	Manufacturer mode

Code	Name	Set range	unit	value	Effective mode	Set method	Set mode
P10-04	Single cycle pulse count of motor	1~1073741824	p	1	Stop and restart	Stop setting	Manufacturer mode
P10-06	Rated voltage	0-220V 1-380V	--	0	Stop and restart	Stop setting	Manufacturer mode
P10-07	Rated power	0~65535	10W	75	Stop and restart	Stop setting	Manufacturer mode
P10-08	Rated current	0~65535	0.01A	470	Stop and restart	Stop setting	Manufacturer mode
P10-09	Rated torque	0~65535	0.01Nm	239	Stop and restart	Stop setting	Manufacturer mode
P10-10	Rated speed	0~65535	rpm	3000	Stop and restart	Stop setting	Manufacturer mode
P10-11	Maximum torque	0~65535	0.01Nm	seven hundred and sixteen	Stop and restart	Stop setting	Manufacturer mode
P10-12	Maximum speed	0~65535	rpm	6000	Stop and restart	Stop setting	Manufacturer mode
P10-13	Mechanical constant	0~65535	0.01ms	24	Stop and restart	Stop setting	Manufacturer mode
P10-14	Electrical constant	0~65535	0.01ms	654	Stop and restart	Stop setting	Manufacturer mode
P10-15	Torque coefficient	0~65535	0.01mV/Arms	51	Stop and restart	Stop setting	Manufacturer mode
P10-16	Moment of inertia	0~65535	$kg.mm^2$	130	Stop and restart	Stop setting	Manufacturer mode
P10-17	Extreme logarithm	0~65535	--	4	Stop and restart	Stop setting	Manufacturer mode
P10-18	Phase resistance	0~65535	mΩ	500	Stop and restart	Stop setting	Manufacturer mode
P10-19	Q-axis inductance	0~65535	mH	327	Stop and restart	Stop setting	Manufacturer mode
P10-20	D-axis inductance	0~65535	mH	387	Stop and restart	Stop setting	Manufacturer mode
P10-21	reverse electromotive force coefficient	0~65535	0.01mV/rpm	3330	Stop and restart	Stop setting	Manufacturer mode
P10-22	Z signal corresponds to electrical angle	0~3600	0.1°	1800	Stop and restart	Stop setting	Manufacturer mode

Code	Name	Set range	unit	value	Effective mode	Set method	Set mode
P10-24	positive direction of current	0-Flow into motor, flow out servo is positive 1- Flow out of the motor, flow into the servo is positive	--	0	Stop and restart	Stop setting	R&D personnel
P10-25	Encoder forward direction	0- counterclockwise is positive 1- Clockwise is positive	--	0	Stop and restart	Stop setting	R&D personnel
P10-26	Vw exchange	0~1	--	0	Stop and restart	Set anytime	R&D personnel

8.16 P11 Driver Parameter Group

Code	Name	Set range	unit	value	Effective mode	Set method	Set mode
P11-00	Driver model	2- R8-2202P 3- R8-2204P 5- R8-2208P 6- R8-2210P 7- R8-2215P 8- R8-2230P 2- R8-2202N 3- R8-2204N 5- R8-2208N 6- R8-2210N 7- R8-2215N 8- R8-2230N	--	five	Stop and restart	Stop setting	R&D personnel
P11-02	Rated voltage	0~65535	V	220	read-only	read-only	Manufacturer mode
P11-03	Rated power	1~65535	10W	75	read-only	read-only	Manufacturer mode
P11-04	Rated current	1~65535	0.01A	550	read-only	read-only	Manufacturer mode
P11-05	Maximum current	1~65535	0.01A	1690	read-only	read-only	Manufacturer mode
P11-06	Bus under voltage threshold	0~900	V	200	Stop and restart	Stop setting	Manufacturer mode
P11-07	Bus over voltage voltage threshold	0~900	V	395	Stop and restart	Stop setting	Manufacturer mode
P11-08	Bus voltage discharge threshold	0~900	V	375	Stop and restart	Stop setting	Manufacturer mode
P11-09	Dead Time	1~2000	0.01us	200	Stop and restart	Stop setting	Manufacturer mode
P11-10	Dead zone compensation amount	0~2000	0.01us	200	Stop and restart	Set anytime	Manufacturer mode
P11-11	Dead zone compensation inflection point	0~2000	0.01A	20	Stop and restart	Set anytime	Manufacturer mode
P11-12	Minimum duration of zero vector	0~6250	0.01us	960	Stop and restart	Set anytime	R&D personnel

Code	Name	Set range	unit	value	Effective mode	Set method	Set mode
P11-13	Enable local mode	0~1	--	0	Effective immediately	Stop setting	Ordinary users
P11-14	Current loop D-axis gain Kp	0~65535	--	2000	Effective immediately	Set anytime	Manufacturer mode
P11-15	Integral coefficient Ki of current loop D-axis	0~65535	Q7	256	Effective immediately	Set anytime	Manufacturer mode
P11-16	Current loop Q-axis gain Kp	0~65535	--	2000	Effective immediately	Set anytime	Manufacturer mode
P11-17	Current loop Q-axis integral coefficient Ki	0~65535	Q7	128	Effective immediately	Set anytime	Manufacturer mode
P11-18	Current loop D-axis gain Kp2	0~65535	--	1000	Effective immediately	Set anytime	Manufacturer mode
P11-19	Integration coefficient Ki2 of current loop D-axis	0~65535	Q7	200	Effective immediately	Set anytime	Manufacturer mode
P11-20	Current loop Q-axis gain Kp2	0~65535	--	1000	Effective immediately	Set anytime	Manufacturer mode
P11-21	Current loop Q-axis integral coefficient Ki2	0~65535	Q7	100	Effective immediately	Set anytime	Manufacturer mode
P11-22	Current loop gain coefficient Kp2Cef	0~10000	Q10	1024	Effective immediately	Set anytime	Manufacturer mode
P11-23	Current loop gain coefficient Kp3Coef	0~10000	Q10	1024	Effective immediately	Set anytime	Manufacturer mode
P11-24	Current loop gain switch point 1 current	0~3000	‰	10	Effective immediately	Set anytime	Manufacturer mode
P11-25	Current loop gain switch point 2 current	0~3000	‰	20	Effective immediately	Set anytime	Manufacturer mode
P11-26	Current loop gain switch point 3 current	0~3000	‰	1000	Effective immediately	Set anytime	Manufacturer mode
P11-27	Current loop gain switch point 4 current	0~3000	‰	2000	Effective immediately	Set anytime	Manufacturer mode

Code	Name	Set range	unit	value	Effective mode	Set method	Set mode
P11-28	D-axis back electromotive force compensation coefficient	0~65535	0.1%	600	Effective immediately	Set anytime	Manufacturer mode
P11-29	Q-axis back electromotive force compensation coefficient	0~65535	0.1%	1000	Effective immediately	Set anytime	Manufacturer mode
P11-30	Voltage decoupling resistance effect failure	0-Enable 1- Disability	--	0	Stop and restart	Set anytime	Manufacturer mode
P11-31	Voltage decoupling inductance effect failure	0-Enable 1- Disability	--	0	Stop and restart	Set anytime	Manufacturer mode
P11-32	Voltage decoupling back electromotive force effect incapacitation	0-Enable 1- Disability	--	0	Stop and restart	Set anytime	Manufacturer mode
P11-33	Voltage decoupling disabling control	0-Enable 1- Disability	--	0	Stop and restart	Set anytime	Manufacturer mode
P11-34	Maximum sampling current	1~65535	0.01A	1200	Stop and restart	Set anytime	R&D personnel
P11-35	Phase overcurrent detection threshold	0~10000	0.01A	1800	Stop and restart	Set anytime	Manufacturer mode
P11-36	UVW over current detection filtering time	0~60000	0.1us	96	Stop and restart	Set anytime	Manufacturer mode
P11-37	Power failure detection mode	0-Bus phase loss detection 1. Control voltage detection	--	0	Effective immediately	Set anytime	R&D personnel
P11-38	Single phase electrical input allowed	0- Prohibited 1- Allow	--	0	Stop and restart	Set anytime	R&D personnel
P11-39	FOC calculation time	100~10000	0.01us	260	Stop and restart	Set anytime	R&D personnel
P11-40	MCU current command processing time	0~6000	0.01us	5500	Stop and restart	Set anytime	R&D personnel

Code	Name	Set range	unit	value	Effective mode	Set method	Set mode
P11-41	Bus encoder data transmission compensation time	0~1000	0.01us	0	Stop and restart	Set anytime	R&D personnel
P11-42	Absolute encoder command transmission interval	0~65535	--	3120	Stop and restart	Set anytime	R&D personnel
P11-47	Minimum allowable energy consumption resistance of the driver	1~1000	Ω	40	Stop and restart	Set anytime	R&D personnel
P11-48	Built in energy consumption resistor, power capacity	1~65535	W	40	Stop and restart	Set anytime	R&D personnel
P11-49	Built in energy consumption resistor resistance value	1~1000	Ω	50	Stop and restart	Set anytime	R&D personnel
P11-50	Resistance heat dissipation coefficient	10~100	--	30	Stop and restart	Stop setting	Manufacturer mode
P11-51	Maximum regeneration time	0~30000	ms	3000	Stop and restart	Set anytime	Manufacturer mode
P11-52	carrier frequency	4000~20000	Hz	8000	Stop and restart	Set anytime	R&D personnel
P11-53	Current sampling mode	0-Trigger Sampling 1- Continuous sampling	--	0	Stop and restart	Set anytime	R&D personnel
P11-54	PWM immediate update enable	0- Not enabled, updated twice per carrier wave period 1- Enable, update immediately	--	1	Stop and restart	Set anytime	R&D personnel
P11-55	Frequency selection for current loop modulation	0~1	--	0	Stop and restart	Set anytime	R&D personnel
P11-56	Speed loop scheduling frequency division coefficient	0-The current loop and carrier frequency are consistent 1-The current loop frequency is twice the carrier frequency	--	1	Stop and restart	Set anytime	R&D personnel

Code	Name	Set range	unit	value	Effective mode	Set method	Set mode
P11-57	Frequency division coefficient for position loop scheduling	2~128	--	4	Stop and restart	Set anytime	R&D personnel
P11-58	Maximum allowable duration of et1100 NWAIT signal	0~204	0.1us	12	Stop and restart	Set anytime	R&D personnel
P11-59	Driver load rate filtering time constant	0~10000	0.1s	300	Stop and restart	Set anytime	R&D personnel
P11-76	Enable bus voltage filtering	0		0	Effective immediately	Set anytime	R&D personnel
P11-77	Number of bus voltage filtering cycles	1~20	125us	1	Restart to take effect	Stop setting	R&D personnel

8.17 P12 Auxiliary Function Parameter Group

Code	Name	Set range	unit	value	Effective mode	Set method	Set mode
P12-00	Servo restart	0- No operation 1. Servo restart 2. User parameter reset to factory settings	--	0	Effective immediately	Stop setting	Ordinary users

Code	Name	Set range	unit	value	Effective mode	Set method	Set mode
P12-01	Alarm clearing	0- No operation 1. Clear the current alarm (this operation cannot be operated when the internal enable or son input is ON) 2- Clear alarm records	--	0	Effective immediately	Stop setting	Ordinary users
P12-02	JOG enable	0~6000	rpm	0	Effective immediately	Set anytime	Ordinary users
P12-03	Inertia identification	0~65	--	0	Effective immediately	Set anytime	Ordinary users
P12-04	Absolute encoder reset operation	0- No operation 1-Absolute encoder alarm reset 2-Absolute encoder reset 3- Single circle data reset	--	0	Effective immediately	Stop setting	Ordinary users

8.18 P13 Monitoring Parameter Group

Code	Name	Set range	unit	value	Effective mode	Set method	Set mode
P13-00	Servo operation status	0-Servo not ready 1- Servo ready 2- Servo operation 3- Servo malfunction	--	0	read-only	read-only	Ordinary users
P13-01	Alarm ID	0~65535	--	0	read-only	read-only	Ordinary users
P13-02	motor speed	-32767~32767	rpm	0	read-only	read-only	Ordinary users
P13-03	Speed command	-32767~32767	rpm	0	read-only	read-only	Ordinary users
P13-04	Torque command	-32767~32767	‰	0	read-only	read-only	Ordinary users
P13-05	Torque feedback	-32767~32767	‰	0	read-only	read-only	Ordinary users
P13-10	Command pulse counting	-2147483648~2147483647	ins	0	read-only	read-only	Ordinary users
P13-12	Input pulse count	-2147483648~2147483647	ins	0	read-only	read-only	Ordinary users
P13-14	Feedback pulse counting	-2147483648~2147483647	p	0	read-only	read-only	Ordinary users
P13-16	Position deviation (command unit)	-2147483648~2147483647	ins	0	read-only	read-only	Ordinary users
P13-18	Position deviation (encoder unit)	-2147483648~2147483647	p	0	read-only	read-only	Ordinary users
P13-20	Command pulse speed	-32767~32767	rpm	0	read-only	read-only	Ordinary users
P13-21	Bus voltage	-32767~32767	0.1V	0	read-only	read-only	Ordinary users
P13-22	Control the bus voltage	0~65535	0.1V	0	read-only	read-only	Ordinary users
P13-23	Phase current	0~65535	0.01 A	0	read-only	read-only	Ordinary users
P13-24	Effective value of driver output line voltage	0~65535	0.1V	0	read-only	read-only	Ordinary users
P13-25	Driver temperature	0~65535	0.1℃	0	read-only	read-only	Ordinary users

Code	Name	Set range	unit	value	Effective mode	Set method	Set mode
P13-26	IGBT temperature	0~2000	0.1℃	0	read-only	read-only	Ordinary users
P13-27	Driver load rate	0~10000	‰	0	read-only	read-only	Ordinary users
P13-28	Motor load rate	0~8000	‰	0	read-only	read-only	Ordinary users
P13-29	Input signal monitoring DI	0~65535	--	0	read-only	read-only	Ordinary users
P13-30	Output signal monitoring DO	0~65535	--	0	read-only	read-only	Ordinary users
P13-31	Electrical angle	0~3600	0.1°	0	read-only	read-only	Ordinary users
P13-32	Encoder single turn position	-2147483648~2147483647	p	0	read-only	read-only	Ordinary users
P13-34	Encoder multi turn position	0~65535	circle	0	read-only	read-only	Ordinary users
P13-36	Mechanical absolute position counting (command unit)	-2147483648~2147483647	ins	0	read-only	read-only	Ordinary users
P13-38	Mechanical absolute position is low 32 bits (encoder unit)	-2147483648~2147483647	p	0	read-only	read-only	Ordinary users
P13-40	Mechanical absolute position is high 32 bits (encoder unit)	-2147483648~2147483647	p	0	read-only	read-only	Ordinary users
P13-42	Rotating load single turn position (command unit)	0~2147483647	ins	0	read-only	read-only	Ordinary users
P13-44	Rotating load single turn position is low 32 bits (encoder unit)	0~2147483647	p	0	read-only	read-only	Ordinary users
P13-46	Rotating load single turn position is high 32 bits (encoder unit)	0~2147483647	p	0	read-only	read-only	Ordinary users

Code	Name	Set range	unit	value	Effective mode	Set method	Set mode
P13-48	Encoder position is low by 32 bits	-2147483648~2147483647	p	0	read-only	read-only	Ordinary users
P13-50	Encoder position is high 32 bits	-2147483648~2147483647	p	0	read-only	read-only	Ordinary users
P13-52	AI1 sampling voltage	-32767~32767	mV	0	read-only	read-only	Ordinary users
P13-53	AI2 sampling voltage	-32767~32767	mV	0	read-only	read-only	Ordinary users
P13-54	AI3 sampling voltage	-32767~32767	mV	0	read-only	read-only	Ordinary users
P13-55	Load inertia ratio	0~65535	%	0	read-only	read-only	Ordinary users
P13-56	External load torque	-1000~1000	‰	0	read-only	read-only	Ordinary users
P13-57	Fault record index	0~9	--	0	read-only	read-only	Ordinary users
P13-58	Fault code	0~65535	--	0	read-only	read-only	Ordinary users
P13-60	Selected fault timestamp low bit	0~2147483647	0.1s	0	read-only	read-only	Ordinary users
P13-62	Speed at selected fault	-32767~32767	rpm	0	read-only	read-only	Ordinary users
P13-63	U-phase current during selected fault	-32767~32767	0.01 A	0	read-only	read-only	Ordinary users
P13-64	V-phase current during selected fault	-32767~32767	0.01 A	0	read-only	read-only	Ordinary users
P13-65	Bus voltage at selected fault	0~65535	0.1V	0	read-only	read-only	Ordinary users
P13-66	Input terminal status when selecting faults	0~65535	--	0	read-only	read-only	Ordinary users
P13-67	Output terminal status at selected fault	0~65535	--	0	read-only	read-only	Ordinary users
P13-68	Command speed at selected fault	-30000~30000	rpm	0	read-only	read-only	Ordinary users
P13-69	Command torque for selected faults	-30000~30000	‰	0	read-only	read-only	Ordinary users

Code	Name	Set range	unit	value	Effective mode	Set method	Set mode
P13-70	Feedback torque for selected faults	-30000~30000	‰	0	read-only	read-only	Ordinary users
P13-71	Position command for selected fault	-32767~32767	p	0	read-only	read-only	Ordinary users
P13-72	Position deviation during selected fault	-32767~32767	p	0	read-only	read-only	Ordinary users
P13-73	Control word for selected fault	0~65535	--	0	read-only	read-only	Ordinary users
P13-74	Status word for selected fault	0~65535	--	0	read-only	read-only	Ordinary users
P13-77	Number of effective faults	0~65535	--	0	read-only	read-only	Ordinary users
P13-78	Function code group number with abnormal parameters	0~65535	--	0	read-only	read-only	Ordinary users
P13-79	Function code group offset with abnormal parameters	0~65535	--	0	read-only	read-only	Ordinary users
P13-80	Total running time	0~2147483647	0.1s	0	read-only	read-only	Ordinary users
P13-91	Maximum scheduling time for the main loop within 4 seconds	0~65535	us	0	read-only	read-only	R&D personnel
P13-92	Maximum running time of the main loop within 4 seconds	0~65535	us	0	read-only	read-only	R&D personnel
P13-93	Maximum interruption running time of current loop within 4 seconds	0~65535	us	0	read-only	read-only	R&D personnel
P13-94	Maximum interruption running time of the position loop within 4 seconds	0~65535	us	0	read-only	read-only	R&D personnel

8.19 P15 Virtual IO Parameter Group

Code	Name	Set range	Unit	Value	Effective mode	Set method	Set mode

P15-00	VDI1 terminal function selection	0- No allocation 1-Servo Enable 2- Fault reset 3-Gain switch 4-command switch 5-command direction switch 6- Internal command switch0 7-Internal command switch 1 8-Internal command switch 2 9-Internal command switch 3 10 Operation mode switch 0 11- Operation mode switch 1 12 Zero Clamp 13- Pulse prohibition 14- Prohibition of forward rotation 15- Do not reverse 16- switch of external torque limit for forward rotation 17- switch of external torque limit for Reverse rotation 18-jog forward 19- Jog reversal 20- Reserved, 21- Reserved, 22- Reserved, 23- Reserved 24- Electronic gear switch 25- Direction of torque command 26- Speed command direction 27- Position Command Direction 28- Enable multi position operation 29- Cancel interrupt fixed length action 30- Reserved 31- Origin signal 32- Origin regression trigger signal 33- Interruption fixed length prohibition 34- Emergency stop 35- Clearance of Position Deviation 36- Speed limit selection 37 Pulse command prohibited 38 Probe 1 39 Probe 2	--	0	Effective immediately	Set anytime	Ordinary users
P15-01	VDI2 terminal function selection	Same parameter P15-00	--	0	Effective immediately	Set anytime	Ordinary users

P15-02	VDI3 terminal function selection	Same parameter P15-00	--	0	Effective immediately	Set anytime	Ordinary users
P15-03	VDI4 terminal function selection	Same parameter P15-00	--	0	Effective immediately	Set anytime	Ordinary users
P15-04	VDI5 terminal function selection	Same parameter P15-00	--	0	Effective immediately	Set anytime	Ordinary users
P15-05	VDI6 terminal function selection	Same parameter P15-00	--	0	Effective immediately	Set anytime	Ordinary users
P15-06	VDI7 terminal function selection	Same parameter P15-00	--	0	Effective immediately	Set anytime	Ordinary users
P15-07	VDI8 terminal function selection	Same parameter P15-00	--	0	Effective immediately	Set anytime	Ordinary users
P15-08	VDI9 terminal function selection	Same parameter P15-00	--	0	Effective immediately	Set anytime	Ordinary users
P15-09	VDI10 terminal function selection	Same parameter P15-00	--	0	Effective immediately	Set anytime	Ordinary users
P15-10	VDI11 terminal function selection	Same parameter P15-00	--	0	Effective immediately	Set anytime	Ordinary users
P15-11	VDI12 terminal function selection	Same parameter P15-00	--	0	Effective immediately	Set anytime	Ordinary users
P15-12	VDI13 terminal function selection	Same parameter P15-00	--	0	Effective immediately	Set anytime	Ordinary users
P15-13	VDI14 terminal function selection	Same parameter P15-00	--	0	Effective immediately	Set anytime	Ordinary users
P15-14	VDI15 terminal function selection	Same parameter P15-00	--	0	Effective immediately	Set anytime	Ordinary users

P15-15	VDI16 terminal function selection	Same parameter P15-00	--	0	Effective immediately	Set anytime	Ordinary users
P15-16	VDI1 terminal logic selection	0-VDI1 Write 1 is valid 1-VDI1 valid when transfer from 0 to 1	--	0	Effective immediately	Set anytime	Ordinary users
P15-17	VDI1 terminal logic selection	0-VDI1 Write 1 is valid 1-VDI1 valid when transfer from 0 to 1	--	0	Effective immediately	Set anytime	Ordinary users
P15-18	VDI1 terminal logic selection	0-VDI1 Write 1 is valid 1-VDI1 valid when transfer from 0 to 1	--	0	Effective immediately	Set anytime	Ordinary users
P15-19	VDI1 terminal logic selection	0-VDI1 Write 1 is valid 1-VDI1 valid when transfer from 0 to 1	--	0	Effective immediately	Set anytime	Ordinary users
P15-20	VDI1 terminal logic selection	0-VDI1 Write 1 is valid 1-VDI1 valid when transfer from 0 to 1	--	0	Effective immediately	Set anytime	Ordinary users
P15-21	VDI1 terminal logic selection	0-VDI1 Write 1 is valid 1-VDI1 valid when transfer from 0 to 1	--	0	Effective immediately	Set anytime	Ordinary users
P15-22	VDI1 terminal logic selection	0-VDI1 Write 1 is valid The write value of 1-VDI1 changes from 0 to 1, which is valid	--	0	Effective immediately	Set anytime	Ordinary users
P15-23	VDI1 terminal logic selection	0-VDI1 Write 1 is valid 1-VDI1 valid when transfer from 0 to 1	--	0	Effective immediately	Set anytime	Ordinary users
P15-24	VDI1 terminal logic selection	0-VDI1 Write 1 is valid 1-VDI1 valid when transfer from 0 to 1	--	0	Effective immediately	Set anytime	Ordinary users
P15-25	VDI1 terminal logic selection	0-VDI1 Write 1 is valid 1-VDI1 valid when transfer from 0 to 1	--	0	Effective immediately	Set anytime	Ordinary users
P15-26	VDI1 terminal logic selection	0-VDI1 Write 1 is valid 1-VDI1 valid when transfer from 0 to 1	--	0	Effective immediately	Set anytime	Ordinary users
P15-27	VDI1 terminal logic selection	0-VDI1 Write 1 is valid 1-VDI1 valid when transfer from 0 to 1	--	0	Effective immediately	Set anytime	Ordinary users

P15-28	VDI1 terminal logic selection	0-VDI1 Write 1 is valid 1-VDI1 valid when transfer from 0 to 1	--	0	Effective immediately	Set anytime	Ordinary users
P15-29	VDI1 terminal logic selection	0-VDI1 Write 1 is valid 1-VDI1 valid when transfer from 0 to 1	--	0	Effective immediately	Set anytime	Ordinary users
P15-30	VDI1 terminal logic selection	0-VDI1 Write 1 is valid 1-VDI1 valid when transfer from 0 to 1	--	0	Effective immediately	Set anytime	Ordinary users
P15-31	VDI1 terminal logic selection	0-VDI1 Write 1 is valid 1-VDI1 valid when transfer from 0 to 1	--	0	Effective immediately	Set anytime	Ordinary users
P15-32	VDO virtual level	0~65535	--	0	read-only	read-only	Ordinary users
P15-33	VDO1 terminal function selection	0- Undefined 1- Servo ready signal 2- Rotation signal 3-Zero speed signal 4- Torque arrival 5-speed reaching signal 6-Position arrival signal 7-Position proximity signal 8-Torque limit 9-Speed limit 10- Brake 11- Warning 12- Alarm 13- Reserved 14- Reserved 15- Reserved 16- Interrupt fixed length completion 17- Origin regression completed 18- Electrical origin regression completed	--	0	Effective immediately	Set anytime	Ordinary users
P15-34	VDO1 terminal function selection	Same parameter P15-33	--	0	Effective immediately	Set anytime	Ordinary users
P15-35	VDO1 terminal function selection	Same parameter P15-33	--	0	Effective immediately	Set anytime	Ordinary users
P15-36	VDO1 terminal function selection	Same parameter P15-33	--	0	Effective immediately	Set anytime	Ordinary users

P15-37	VDO1 terminal function selection	Same parameter P15-33	--	0	Effective immediately	Set anytime	Ordinary users
P15-38	VDO1 terminal function selection	Same parameter P15-33	--	0	Effective immediately	Set anytime	Ordinary users
P15-39	VDO1 terminal function selection	Same parameter P15-33	--	0	Effective immediately	Set anytime	Ordinary users
P15-40	VDO1 terminal function selection	Same parameter P15-33	--	0	Effective immediately	Set anytime	Ordinary users
P15-41	VDO1 terminal function selection	Same parameter P15-33	--	0	Effective immediately	Set anytime	Ordinary users
P15-42	VDO1 terminal function selection	Same parameter P15-33	--	0	Effective immediately	Set anytime	Ordinary users
P15-43	VDO1 terminal function selection	Same parameter P15-33	--	0	Effective immediately	Set anytime	Ordinary users
P15-44	VDO1 terminal function selection	Same parameter P15-33	--	0	Effective immediately	Set anytime	Ordinary users
P15-45	VDO1 terminal function selection	Same parameter P15-16	--	0	Effective immediately	Set anytime	Ordinary users
P15-46	VDO1 terminal function selection	Same parameter P15-16	--	0	Effective immediately	Set anytime	Ordinary users
P15-47	VDO1 terminal function selection	Same parameter P15-16	--	0	Effective immediately	Set anytime	Ordinary users
P15-48	VDO1 terminal function selection	Same parameter P15-16	--	0	Effective immediately	Set anytime	Ordinary users
P15-49	VDO1 terminal logic level selection	Same parameter P15-16	--	0	Effective immediately	Set anytime	Ordinary users

P15-50	VDO1 terminal logic level selection	Same parameter P15-16	--	0	Effective immediately	Set anytime	Ordinary users
P15-51	VDO1 terminal logic level selection	Same parameter P15-16	--	0	Effective immediately	Set anytime	Ordinary users
P15-52	VDO1 terminal logic level selection	Same parameter P15-16	--	0	Effective immediately	Set anytime	Ordinary users
P15-53	VDO1 terminal logic level selection	Same parameter P15-16	--	0	Effective immediately	Set anytime	Ordinary users
P15-54	VDO1 terminal logic level selection	Same parameter P15-16	--	0	Effective immediately	Set anytime	Ordinary users
P15-55	VDO1 terminal logic level selection	Same parameter P15-16	--	0	Effective immediately	Set anytime	Ordinary users
P15-56	VDO1 terminal logic level selection		--	0	Effective immediately	Set anytime	Ordinary users
P15-57	VDO1 terminal logic level selection		--	0	Effective immediately	Set anytime	Ordinary users
P15-58	VDO1 terminal logic level selection		--	0	Effective immediately	Set anytime	Ordinary users
P15-59	VDO1 terminal logic level selection		--	0	Effective immediately	Set anytime	Ordinary users
P15-60	VDO1 terminal logic level selection		--	0	Effective immediately	Set anytime	Ordinary users
P15-61	VDO1 terminal logic level selection		--	0	Effective immediately	Set anytime	Ordinary users
P15-62	VDO1 terminal logic level selection		--	0	Effective immediately	Set anytime	Ordinary users

P15-63	VDO1 terminal logic level selection		--	0	Effective immediately	Set anytime	Ordinary users
P15-64	VDO1 terminal logic level selection		--	0	Effective immediately	Set anytime	Ordinary users

7.3 P16 version information parameter group

Function code	Parameter Name	Set Range	Company	Factory value	Effective method	Setting method	Set mode
P16-00	MCU firmware version	0~65535	--	0	read-only	read-only	Ordinary users
P16-01	FPGA firmware version	0~65535	--	0	read-only	read-only	Ordinary users
P16-02	Ethercat version	0~65535	--	0	read-only	read-only	Ordinary users
P16-03	User parameter version	0~65535	--	0	read-only	read-only	Ordinary users

Appendix 2: Troubleshooting of Common Servo Problems

7.4 The servo motor has high noise

Phenomenon: After the servo motor is installed on the equipment and enabled, if there is obvious noise from the motor.

terms of settlement:

1. **First, enable the motor under no-load conditions** and observe if there is a similar noise. If there is no obvious noise under no-load conditions, it is highly likely that it is related to the settings of gain and inertia ratio parameters or the installation and stiffness of the equipment. Then, proceed to step 2; If there is the same noise when unloaded, it may be a problem with the driver or motor. You can replace the motor and driver separately for testing.

2. **Confirm whether the inertia ratio is correct and whether the rigidity level is reasonable**. Inertia ratio is the basis for adjusting gain parameters, and inertia identification function or combined calculation should be used to set approximately correct inertia ratio parameters; Reasonable rigidity levels should be set based on the stiffness of the load. Generally, loads with lower stiffness, such as synchronous belts, should have a lower rigidity level. It is recommended that the rigidity be lower than 12. Setting a higher rigidity level may cause the load to vibrate, the motor to hiss, and even cause collisions. For loads with higher rigidity, such as lead screws, a higher rigidity level can be set. However, if the rigidity level is higher, it may also cause the motor to hiss, and the rigidity level should be gradually increased. If there is a hissing sound from the motor in both position and speed modes after confirming the correct inertia ratio and gradually reducing the rigidity level, proceed to step 3.

3. **Confirm if there are any issues with the installation of the equipment**. For example, checking whether the synchronous belt is too tight or too loose, or comparing whether similar problems exist in devices of the same type. If only one device has a similar problem, the driver and motor can be cross replaced to investigate whether it is an electrical or mechanical problem with the equipment.

If the problem of motor hissing noise cannot be solved by testing in sequence or cross combination according to the above steps, a servo upper computer can be used to collect position, speed, and current wave forms to confirm the source of motor hissing noise, and then combined with P03-26 parameters to **reduce the current loop gain** for further analysis and testing.

7.5 The command position is opposite symbol to the feedback position

Phenomenon: During equipment testing and operation, the actual direction of load operation is consistent with the expected direction. The PLC command is a forward

increase, but the feedback position P13-36 of the servo is a reverse increase.

Solution: Change the P0-02 motor in the forward and reverse directions, and then reverse the signal in the P5-17 direction also.

7.6 Abnormal number of servo receiving command pulses

Phenomenon: When the R8 servo is paired with Samkoon PLC or third-party PLC or control board , it is common to see pulse type of servo receive inaccurate numbers of pulses.

terms of settlement:

1. The command pulse frequency is too high, exceeding the maximum servo pulse receiving frequency; The maximum pulse frequency for the 24V collector input of the R8 servo pulse input is 200KHZ, and the maximum pulse frequency for the 5V differential input is 500KHZ. When the command pulse frequency is too high, the number of pulses received by the servo will be a little small. At the customer site, it is possible to try reducing the operating speed of the equipment and lowering the command pulse frequency by checking the P13-12 parameter (command pulse count) on the servo digital tube panel to confirm its effectiveness; If the number of pulses received by the servo is accurate after reducing the command pulse frequency, the number of pulses per cycle P05-00 can be reduced (pulse equivalent increases) without affecting the accuracy, and the PLC's single cycle pulse parameter can be modified to solve this problem; If reducing the command pulse frequency is ineffective, you can continue to troubleshoot according to point 2.

2. The wiring of the equipment is poor, causing significant interference and affecting the quality of the pulse signal; Due to the layout and wiring of the electrical cabinet not necessarily ensuring sufficient isolation of strong and weak electricity, and the unreasonable wiring of the 24V power supply and 0V distribution, the quality of the pulse signal may be poor, and there may be multiple pulses or pulse loss. At the customer's site, the accuracy of the number of pulses received by the servo can be confirmed by disabling the other nearby servos; If the number of pulses received after the other servo is disabled is accurate, the P05-18 (pulse signal filtering)/P05-19 (direction signal filtering) servo parameters can be increased (it is recommended to set P05-19/P05-19 the same), and the filtering time of the pulse and direction signals can be increased to confirm whether it is effective (the maximum value of the parameter is 255, the filtering time is about 2.5us, and the filtering effect is limited); A better solution is to confirm whether the command pulse wiring is too close to the strong current wiring (maintaining a distance of more than 30cm), whether it shares a 24V power supply with the servo motor brake (using a separate switch power supply to supply power to the command pulse), whether the PE wire on the servo command pulse wire is connected to the iron shell of the CN1 DB44 terminal on the servo side (disconnect the iron shell of the R8 servo CN1 DB44 terminal from the PE wire of the pulse wire), and adjust and optimize

the command pulse wiring. When the command pulse frequency is low, the signal width of the pulse is relatively large and generally not easily affected by interference. If it can be ruled out that the abnormal pulse counting is caused by interference, continue to investigate according to point 3. **Typical scene**: The 2.5M long command control line, 24V power line, and PULS -/IGN - are routed separately, small impact on pulse signals resulting in a large current loop area but may big impact on directional signals, leading to inaccurate judge of a reverse signal.

3. The phase of the pulse and direction signal sent by the third-party PLC or control board does not meet the requirements; When using the direction+pulse mode, if the output direction signal delay is large, it will cause some reverse pulses to be error counted as forward pulses, ultimately resulting in a phenomenon of even numbered pulse counting deviation. At the customer site, the influence of pulse reception can be eliminated by modifying the program or disconnecting the directional signal wiring; If the servo receives an accurate number of pulses after disconnecting the direction signal wiring, it is highly likely that the abnormal command pulse count is caused by the direction signal. If the pulse counting deviation is 2 after a reciprocating operation, it can be solved by modifying P05-17 (command pulse signal reverse) to 1

(**typical example**: third-party control board); If the pulse counting deviation is an even number greater than 2 after a reciprocating operation, it is necessary to modify the delay relationship between the pulse and direction signals on the PLC side to solve the problem.

(**Typical example**: third-party PLC+extended IO module. The low-speed IO port output direction signal of the extended module has a large time delay, resulting in a large even pulse deviation during reciprocating operation.)

4. If none of the above solutions solve the problem of abnormal pulse reception, it is possible that the driver is damaged and can be replaced a new one for testing and confirmation.

7.7 Troubleshooting of servo alarm AL.082

The main reason for the AL.082 alarm in the servo is generally due to a short circuit between U/V/W. Short circuits are commonly caused by damage to the driver, internal short circuits in the power line insulation, metal shavings in the terminal joint, and phase to phase short circuits caused by overheating and over current damage to the servo motor. The problem can be quickly located by referring to the following flowchart.

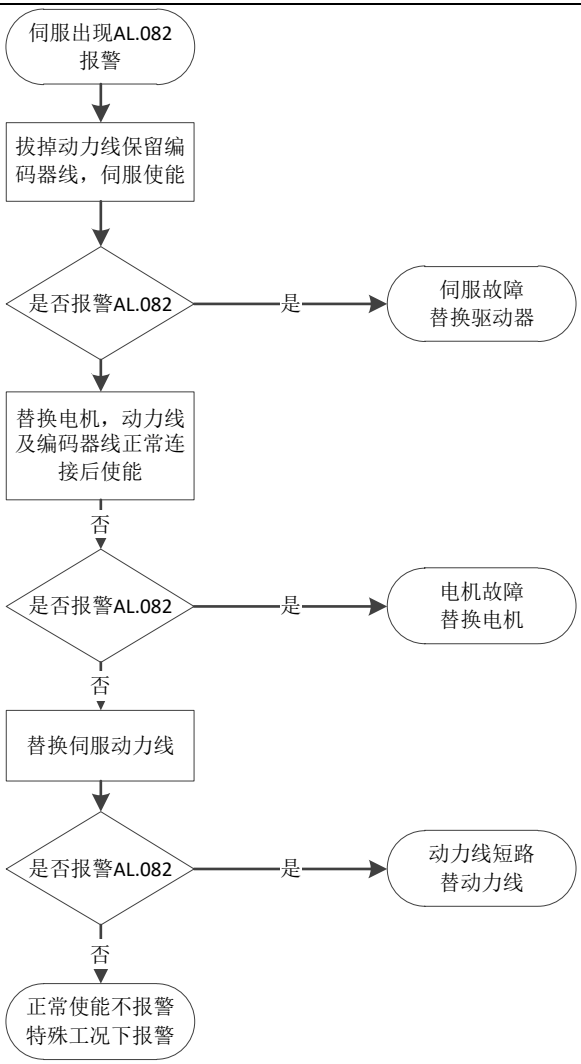

Note that when the AL.082 fault occurs, there is usually irreparable damage to the driver, motor, or wire. Before going to the customer's site to solve the problem, it is advisable to bring a new set of servos better.

7.8 Servo fault conditions and countermeasures

The serious damage to the servo mainly includes the following situations:;

1. The 220VAC servo is mistakenly connected to 380VAC AC power or the power grid is unstable (the power grid suddenly rises to 330VAC at night for 2-3 minutes), and the servo bus capacitor and varistor RV7 are burned out. By checking the alarm records, it is

possible to quickly locate whether it was caused by a misconnection of 380VAC. In order to avoid frequent damage to the servo, it is recommended that customers add a "**recovery type over voltage protector**" to the servo input line . Some customers may consider adding a voltage **regulator,** and pay attention to confirming whether the response speed of the voltage regulator is fast enough.

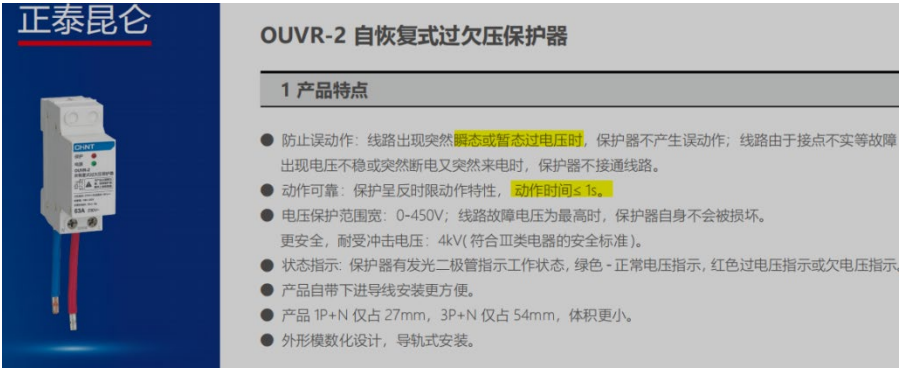

Over voltage protector (short action time)

2. There is a situation where welding machines are used on the customer's site. If the grounding wire of the welding machine has poor contact, it may cause the welding machine circuit to enter the circuit board of the driver, and the protective ground wiring on the circuit board may be burned out. For this working condition, it is recommended to insulate the servo from the iron casing of the electrical cabinet, or disconnect the shielded wires on the encoder and power lines.

3. Some customers may have leakage of A-phase live wire to the ground, causing the voltage between the AC input B-phase live wire of the servo drive and the PE iron shell to exceed 220VAC, resulting in damage to the varistor RV8. This type of problem cannot be quickly confirmed and analyzed through alarm records. A temporary alternative solution is to **cut off one pin of RV8** or **disconnect the** iron shell **of** the servo drive from the ground PE . Please note that this solution is only an emergency response measure.